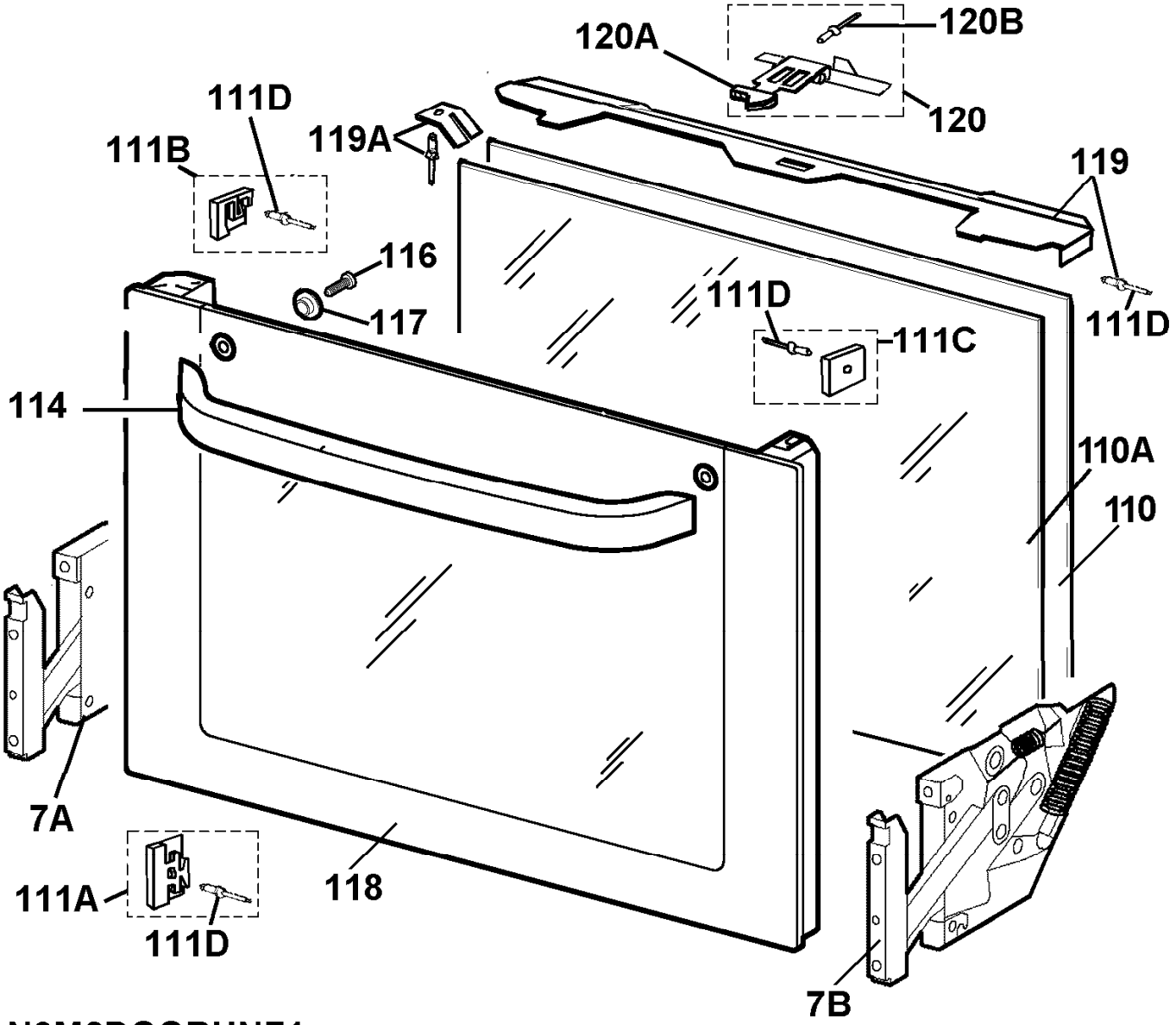

N0M2DOORUNF1