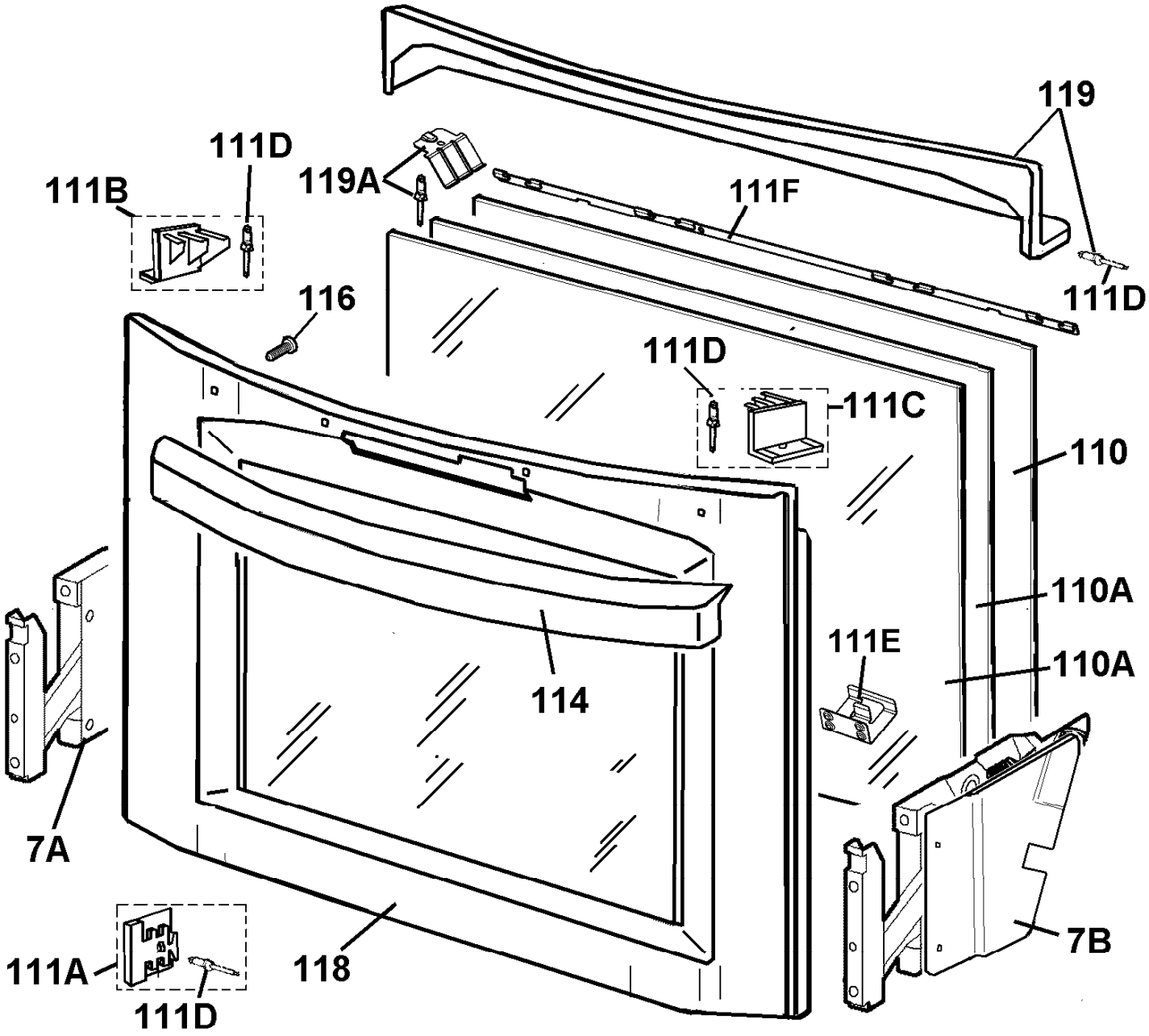

N0M2DOORPYRO1