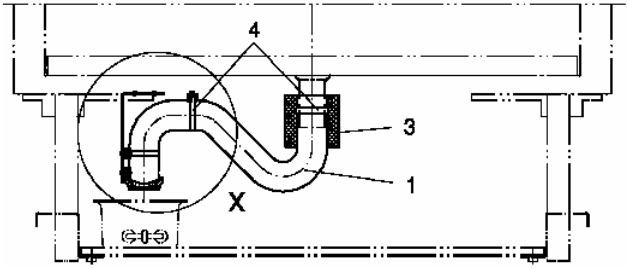

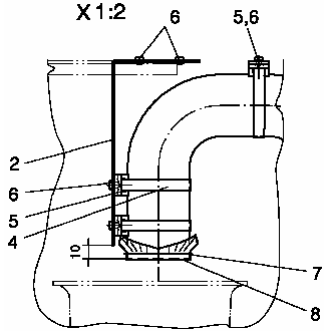

10. DRAIN WATER SIPHON