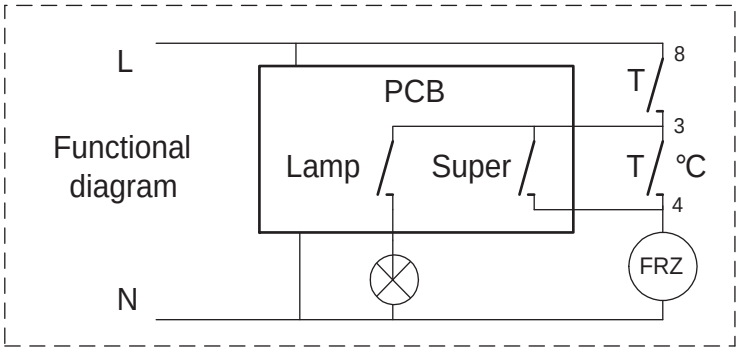

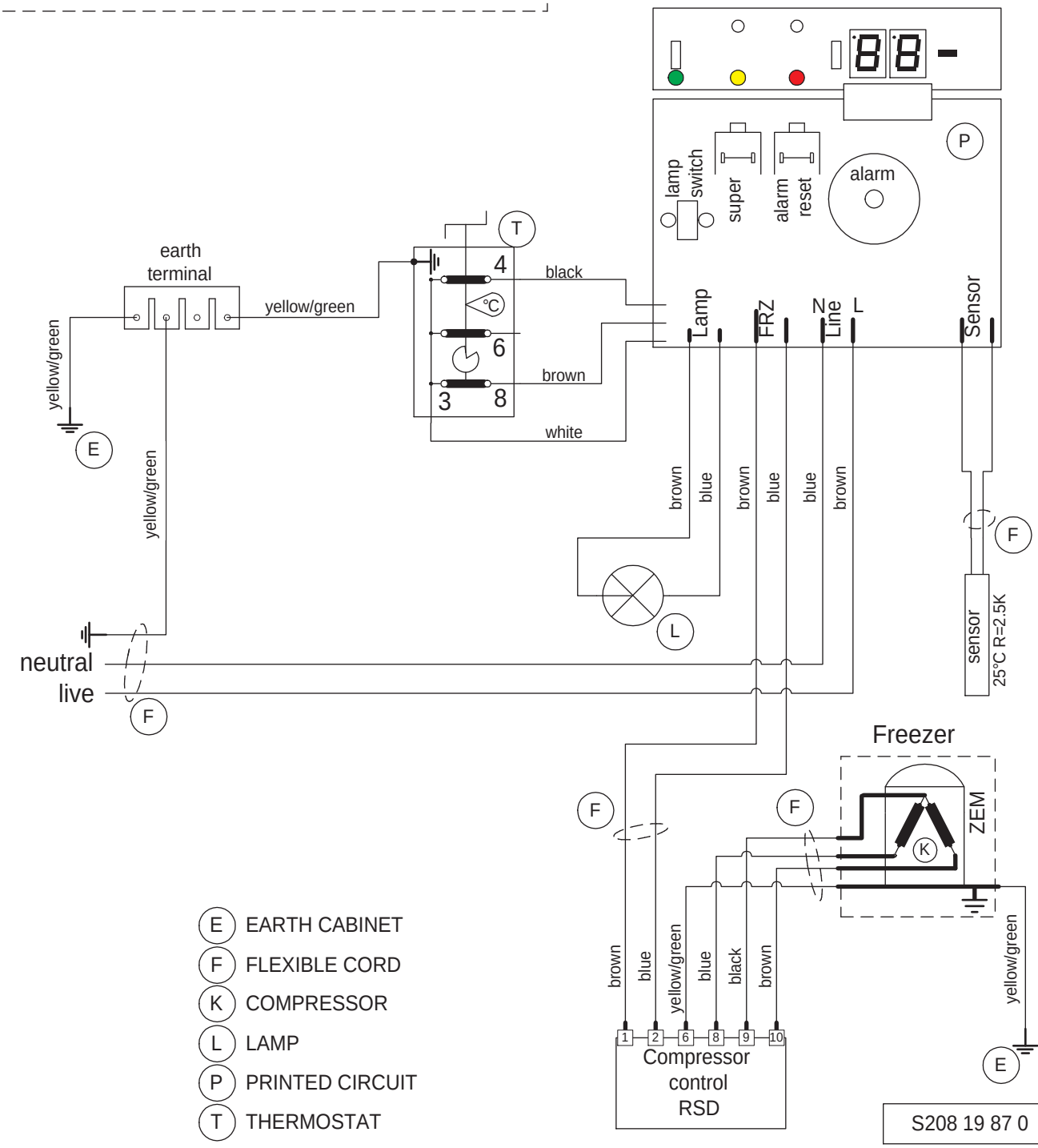

E EARTH CABINET
F FLEXIBLE CORD
K COMPRESSOR
L LAMP
P PRINTED CIRCUIT
T THERMOSTAT

S208 19 87 0