This drawing contains confidential information and is the property of Electrolux, without whose permission it may not be copied, shown or handed to a third party or otherwise used and it is to be returned promptly upon request to the design owner, who is responsible for the drawing.

Items shown in this drawing must not contain substances that are banned according to Directive, 2002/95/EC, the RoHS Directive (Lead, Cadmium, Mercury, hexavalent Chromium, PBB and PBDE), or substances classified as "Banned" or "Restricted" according to the Electrolux Restricted Materials List.

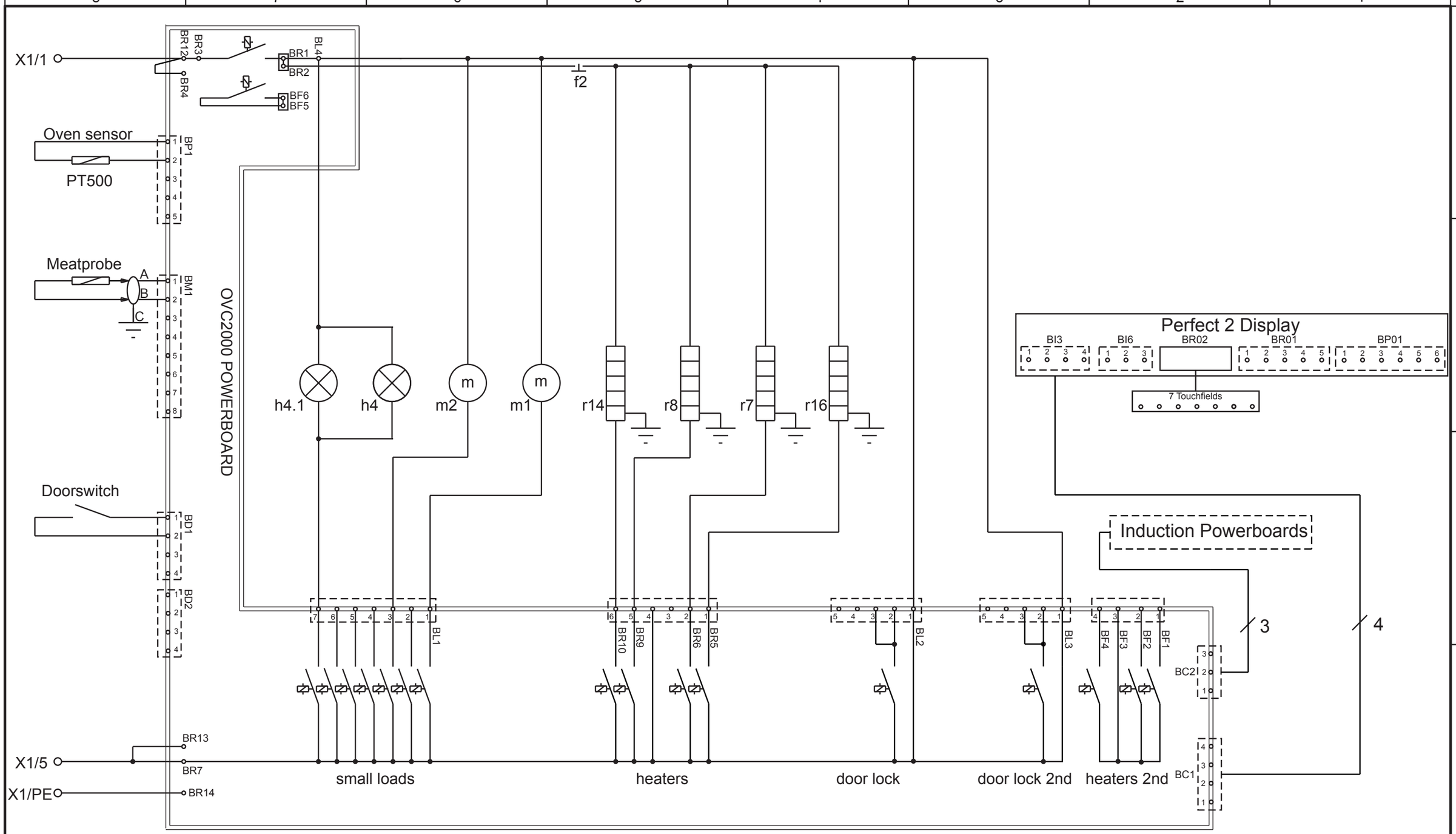

POS.	MODIFICATIONS	SIGNATURE	REQUEST	DATE
A	new edition	S.Holzinger	-	2008-11-21

MATERIAL -		MODEL -	SCALE -
TREATMENT -	WEIGHT - Kg.	DESIGN USERS -	REPLACES -
DESIGN OWNER -	DRN - / DATE 2008-11-21	CHD S.Holzinger / APPR S.Holzinger	2D ONLY - / CONCEPT 3D - / EXACT 3D -
			DERIVED FROM -
			SUPPLY SPECIFICATIONS -

EUROPEAN METHOD

TITLE circuit diagramm oven SO MAXIMA

NUMBER 349 6054 REV A SHEET 1/1

Electrolux

VARIANT NUMBER	REPLACED NUMBER	POS.	MODEL	DESIGN USERS	CHANGES FROM THE BASE NUMBER
349 6059	-	-	-	-	-

GENERAL TOLERANCES
ANGLES
LENGTHS AND DIAMETERS

A3 [DF04]