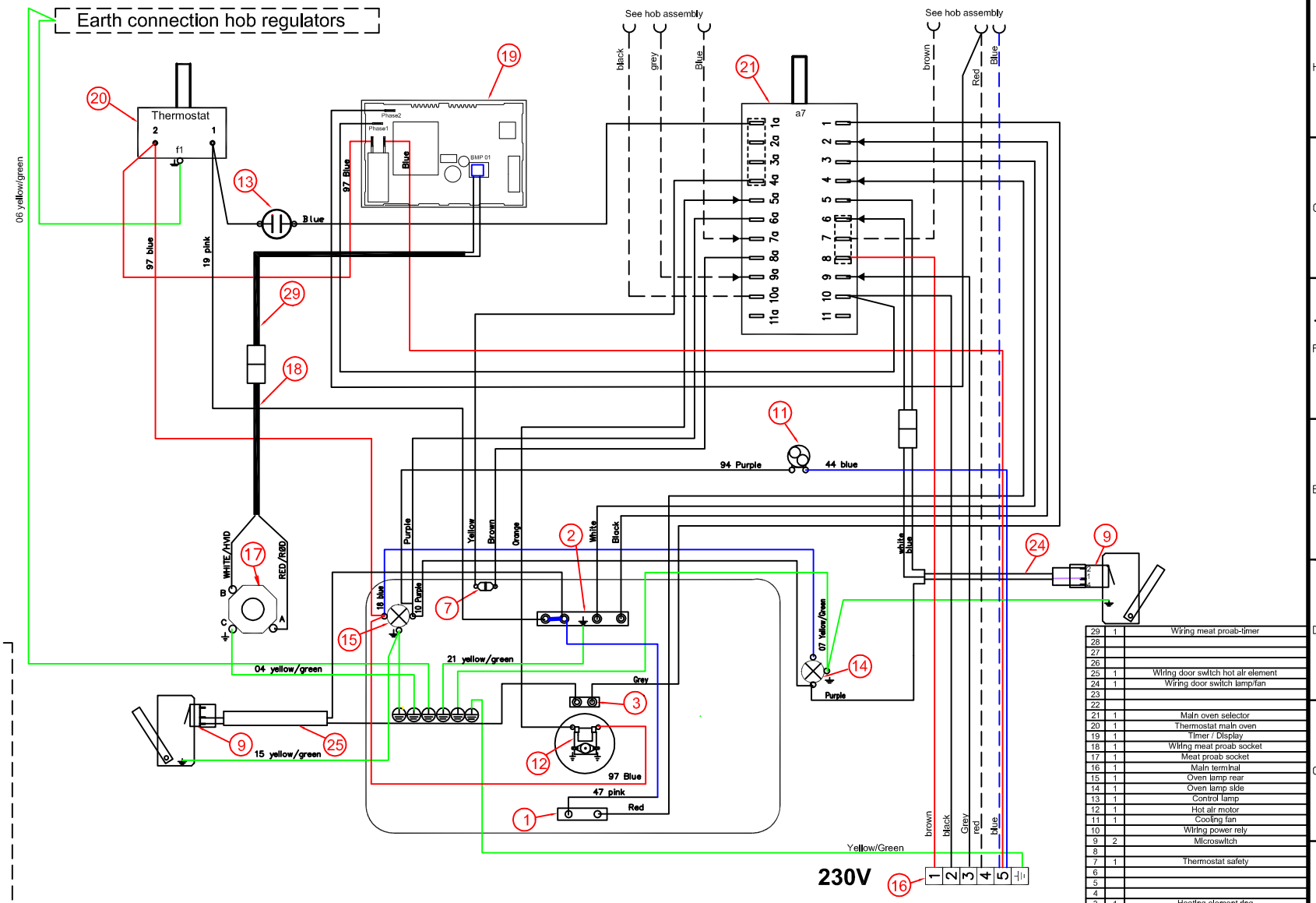

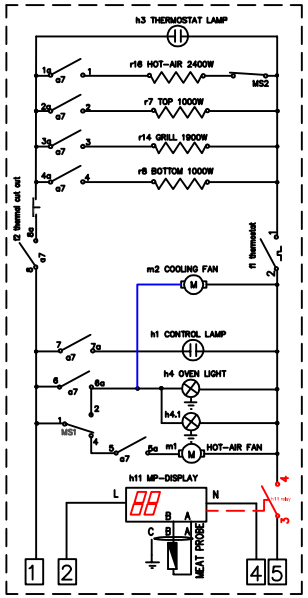

ID	Description	Elux part No.
18	Wiring meat prob socket	349 5794-01
21	Wiring oven harness	349 5925-04
24	Wiring door switch	349 4184-01
25	Wiring door switch	349 4194-01
29	Wiring meat prob timer	349 5795-01
	List of crimp contacts	330 1766
	Component list	330 2222
▶	Insulation house	330 4175

Pos	No	Components
29	1	Wiring meat proab-timer
28		
27		
26		
25	1	Wiring door switch hot air element
24	1	Wiring door switch lamp/fan
23		
22		
21	1	Main oven selector
20	1	Thermostat main oven
19	1	Timer / Display
18	1	Wiring meat proab socket
17	1	Meat proab socket
16	1	Main terminal
15	1	Oven lamp rear
14	1	Oven lamp side
13	1	Control lamp
12	1	Hot air motor
11	1	Cooling fan
10		Wiring power rely
9	2	Microswitch
8		
7	1	Thermostat safety
6		
5		
4		
3	1	Heating element ring
2	1	Heating element top
1	1	Heating element bottom

POS.	MODIFICATIONS	SIGNATURE	REQUEST	DATE
A	First edition UMPD High	IAN	ABS 6673	2008-03-04

MATERIAL
TREATMENT
WEIGHT
DESIGN OWNER -
DRN IAN
DATE 2008-03-04
CHD S.Ahl
APPR S.Ahl
2D ONLY
CONCEPT 3D
EXACT 3D
MODEL
DESIGN USERS
SCALE
REPLACES
DERIVED FROM
SUPPLY SPECIFICATIONS
EUROPEAN METHOD
TITLE Wiring oven assembly Induction
NUMBER 349 5922
REV A
SHEET

Electrolux

VARIANT NUMBER	REPLACED NUMBER	POS.	MODEL	DESIGN USERS	CHANGES FROM THE BASE NUMBER
349 5922-02				-	

GENERAL TOLERANCES
ANGLES
LENGTHS AND DIAMETERS

A2 DF03

This drawing contains confidential information and is the property of Electrolux, without whose permission it may not be copied, shown or handed to a third party or otherwise used and it is to be returned promptly upon request to the design owner, who is responsible for the drawing.

Items shown in this drawing must not contain substances that are banned according to Directive, 2002/95/EC, the RoHS Directive (Lead, Cadmium, Mercury, hexavalent Chromium, PBB and PBDE), or substances classified as "Banned" or "Restricted" according to the Electrolux Restricted Materials List.