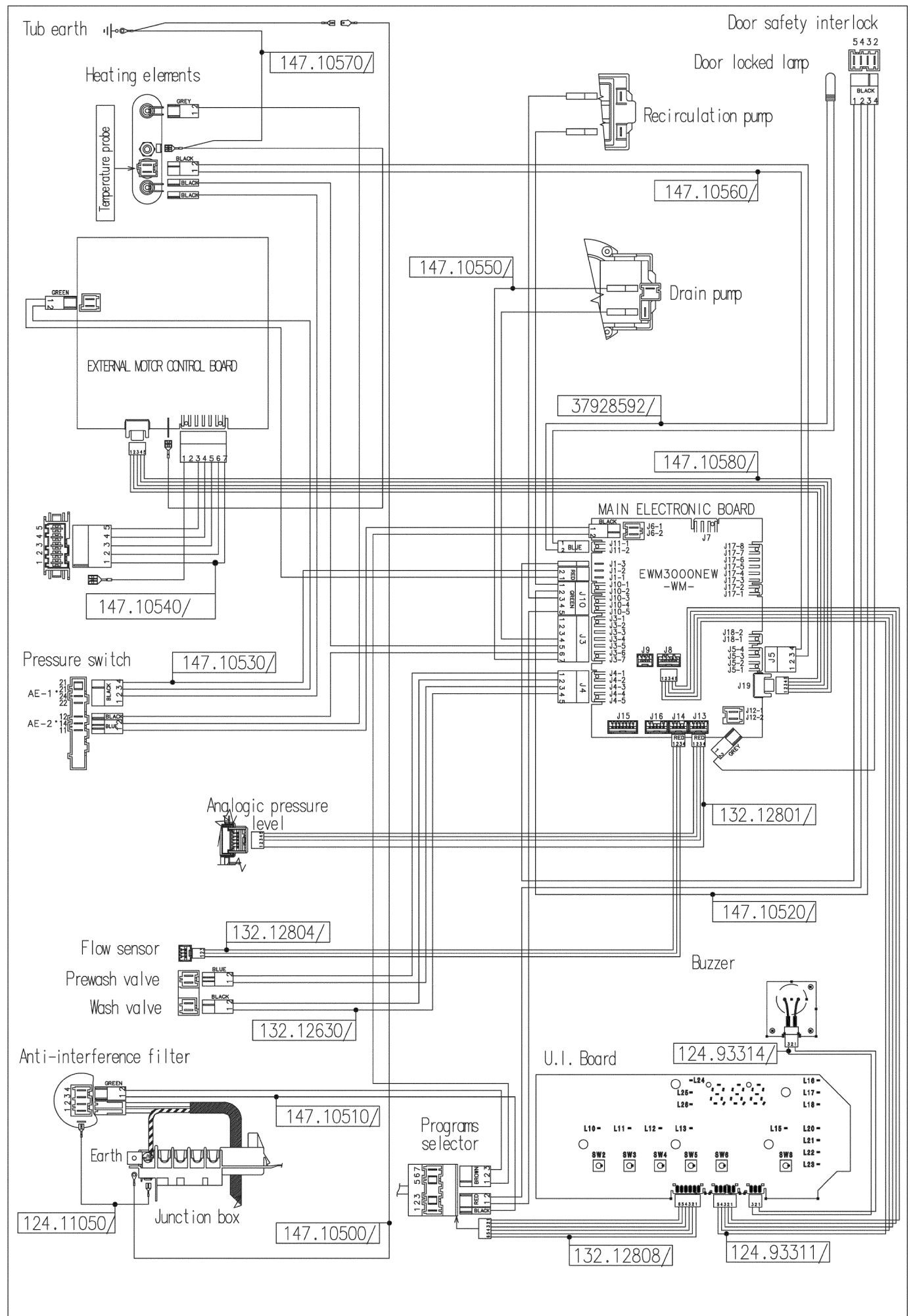
Tub earth
147.10570/
Heating elements
Temperature probe
GREY
BLACK
BLACK
BLACK
Door safety interlock
5432
BLACK
1234
Door locked lamp
Recirculation pump
147.10560/
147.10550/
Drain pump
GREEN
EXTERNAL MOTOR CONTROL BOARD
37928592/
147.10580/
MAIN ELECTRONIC BOARD
EWM3000NEW
-WM-
147.10540/
Pressure switch
147.10530/
AE-1
AE-2
Analogic pressure level
132.12801/
147.10520/
132.12804/
Flow sensor
Prewash valve
Wash valve
132.12630/
Buzzer
124.93314/
U.I. Board
Anti-interference filter
147.10510/
Earth
Junction box
124.11050/
147.10500/
Programs selector
132.12808/
124.93311/

147 109402b