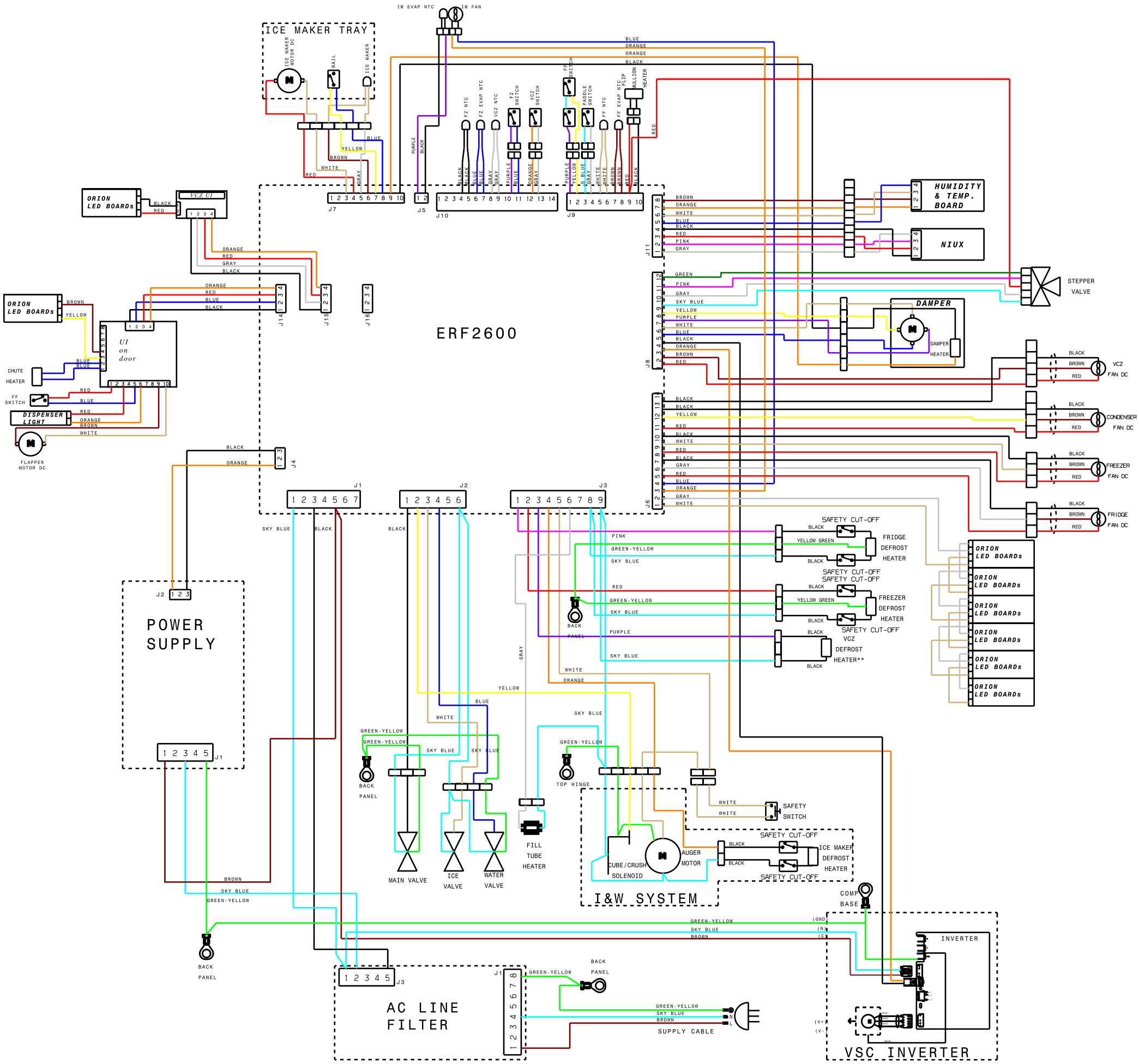
ICE MAKER TRAY
ICE MAKER MOTOR DC
BAIL
ICE MAKER
IM EVAP NTC
IM FAN
FZ NTC
FZ EVAP NTC
VCZ NTC
FZ SWITCH
VCZ SWITCH
FF SWITCH
PADDLE SWITCH
FF NTC
FF EVAP NTC
FLIP MULLION
HEATER
ORION LED BOARDS
VCZ UI
UI on door
CHUTE HEATER
FF SWITCH
DISPENSER LIGHT
FLAPPER MOTOR DC
ERF2600
J1
J2
J3
J4
J5
J6
J7
J8
J9
J10
J11
J14
J15
J16
HUMIDITY & TEMP. BOARD
NIUX
STEPPER VALVE
DAMPER
DAMPER HEATER
VCZ FAN DC
CONDENSER FAN DC
FREEZER FAN DC
FRIDGE FAN DC
SAFETY CUT-OFF
FRIDGE DEFROST HEATER
FREEZER DEFROST HEATER
VCZ DEFROST HEATER**
POWER SUPPLY
BACK PANEL
TOP HINGE
MAIN VALVE
ICE VALVE
WATER VALVE
FILL TUBE HEATER
SAFETY SWITCH
CUBE/CRUSH SOLENOID
AUGER MOTOR
ICE MAKER DEFROST HEATER
I&W SYSTEM
COMP BASE
INVERTER
AC LINE FILTER
SUPPLY CABLE
VSC INVERTER

A12135501