108 4142 00

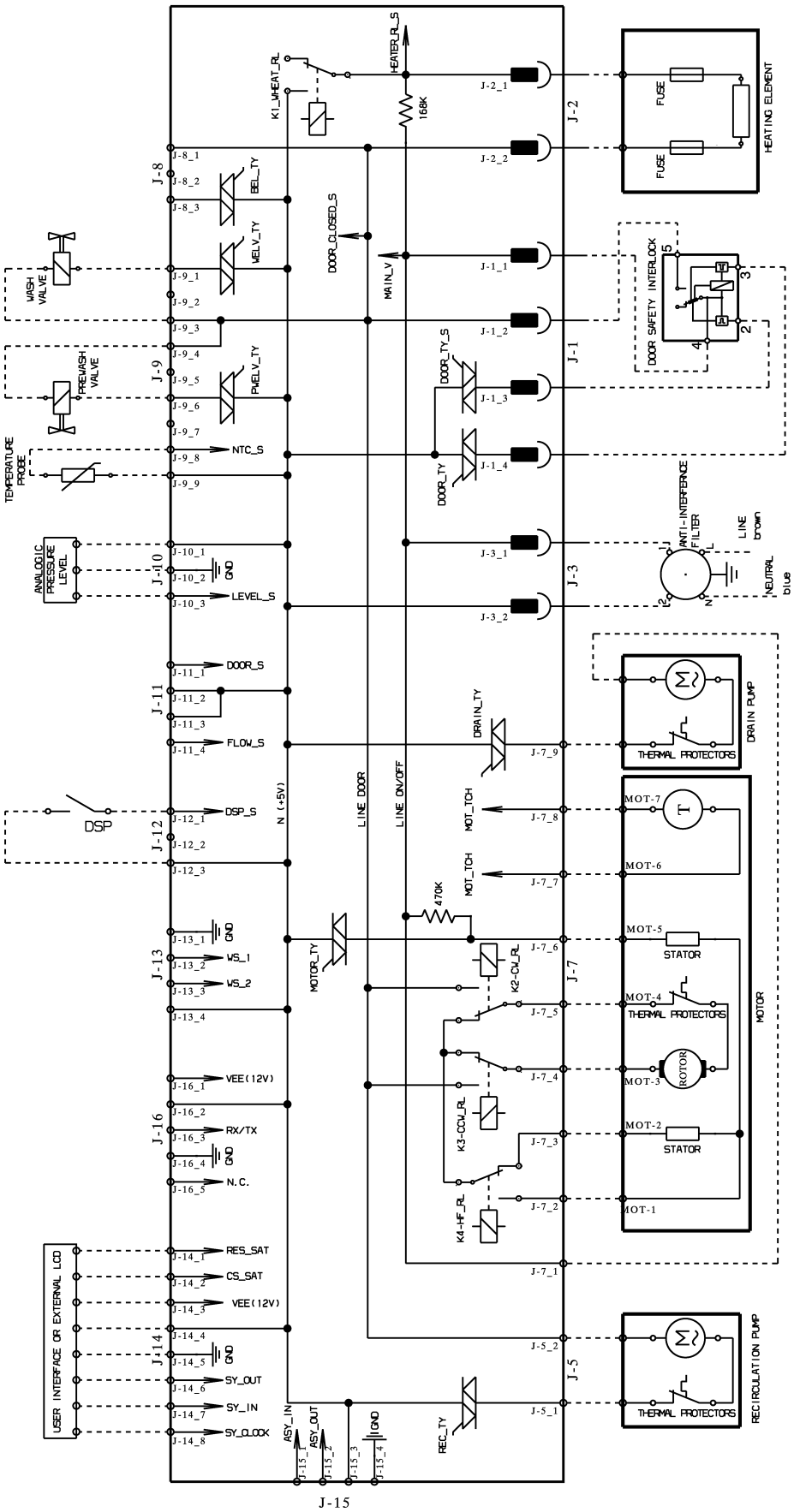

© Electrolux