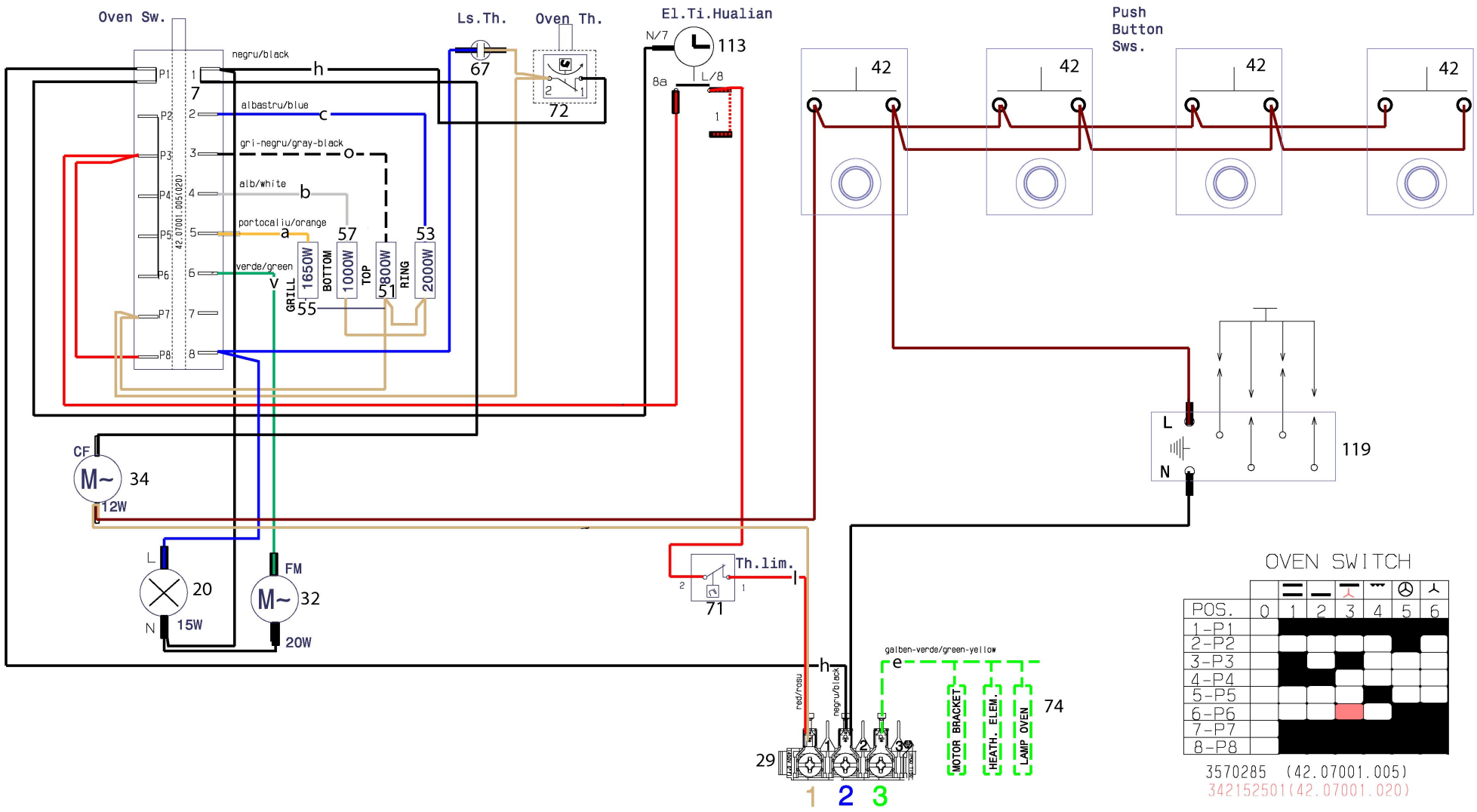
Oven Sw.
Ls.Th.
Oven Th.
El.Ti.Hualian
Push Button Sws.
negru/black
albastru/blue
gri-negru/gray-black
alb/white
portocaliu/orange
verde/green
GRILL 1650W
BOTTOM 1000W
TOP 800W
RING 2000W
42.07001.005(020)
CF
M~ 34
12W
L
N
20
15W
FM
M~ 32
20W
Th.lim.
71
67
72
113
N/7
L/8
8a
42
119
galben-verde/green-yellow
red/rosu
negru/black
MOTOR BRACKET
HEATH. ELEM.
LAMP OVEN
74
29
1 2 3
OVEN SWITCH
POS. 0 1 2 3 4 5 6
1-P1
2-P2
3-P3
4-P4
5-P5
6-P6
7-P7
8-P8
3570285 (42.07001.005)
342152501(42.07001.020)

342149403