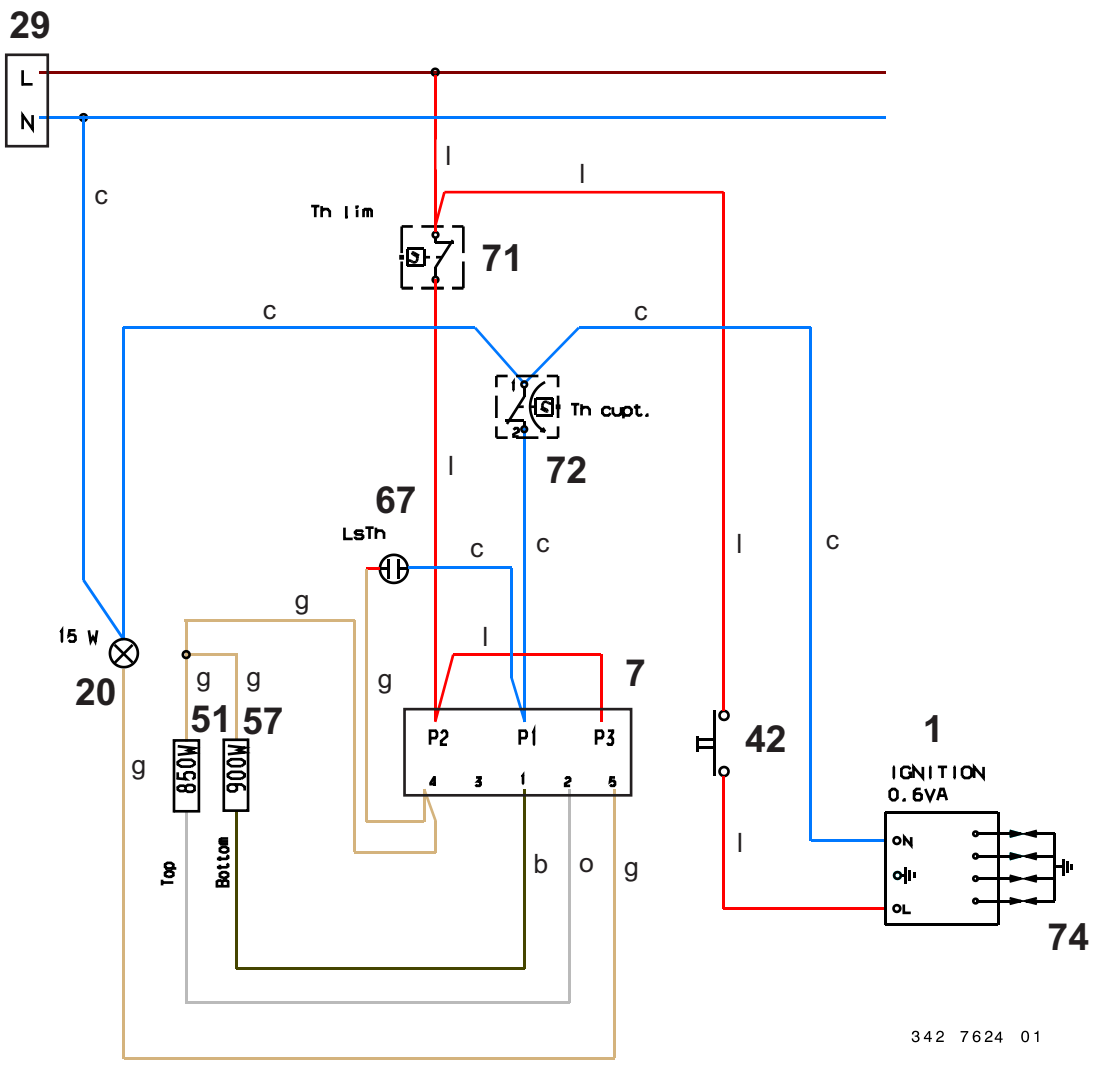

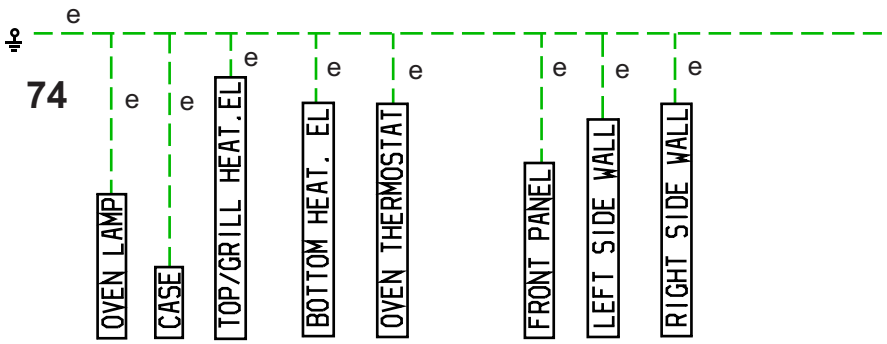

OVEN SWITCH

POS.	0	30	60÷240	270	300
4-P2					
3-P1					
1-P1					
2-P1					
5-P3					