WIRING DIAGRAM

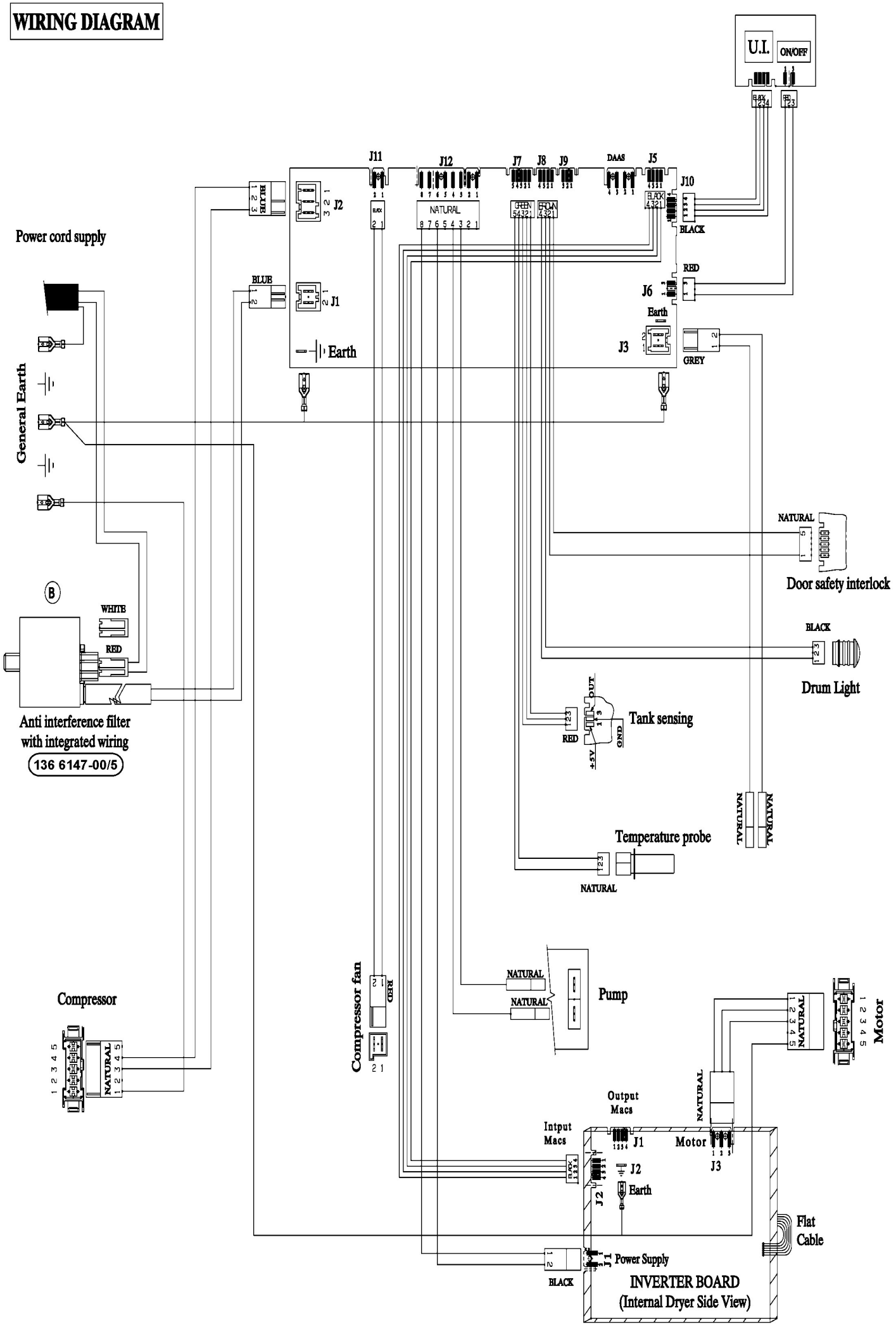

136615401_b