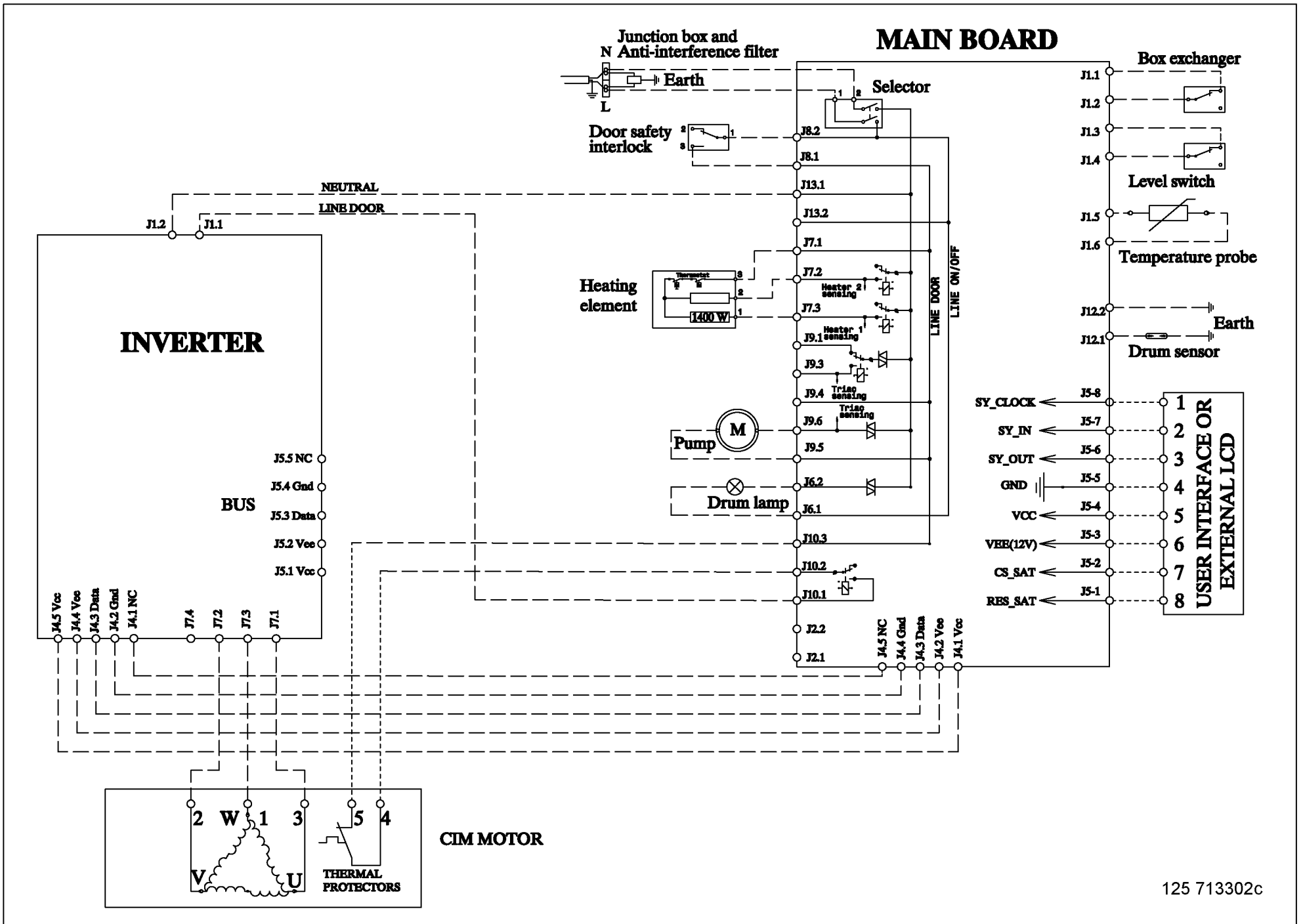
MAIN BOARD
Junction box and
Anti-interference filter
N
L
Earth
Selector
Door safety
interlock
Box exchanger
Level switch
Temperature probe
Earth
Drum sensor
NEUTRAL
LINE DOOR
INVERTER
BUS
J1.2
J1.1
J5.5 NC
J5.4 Gnd
J5.3 Data
J5.2 Vcc
J5.1 Vcc
J4.5 Vcc
J4.4 Vcc
J4.3 Data
J4.2 Gnd
J4.1 NC
J7.4
J7.2
J7.3
J7.1
Heating
element
1400 W
Heater 2
sensing
Heater 1
sensing
Triac
sensing
Pump
M
Drum lamp
LINE DOOR
LINE ON/OFF
J8.2
J8.1
J13.1
J13.2
J7.1
J7.2
J7.3
J9.1
J9.3
J9.4
J9.6
J9.5
J6.2
J6.1
J10.3
J10.2
J10.1
J2.2
J2.1
J4.5 NC
J4.4 Gnd
J4.3 Data
J4.2 Vcc
J4.1 Vcc
J1.1
J1.2
J1.3
J1.4
J1.5
J1.6
J12.2
J12.1
SY_CLOCK
SY_IN
SY_OUT
GND
VCC
VEE(12V)
CS_SAT
RES_SAT
J5-8
J5-7
J5-6
J5-5
J5-4
J5-3
J5-2
J5-1
1
2
3
4
5
6
7
8
USER INTERFACE OR
EXTERNAL LCD
2
W
1
3
5
4
V
U
THERMAL
PROTECTORS
CIM MOTOR
125 713302c