125 714530c

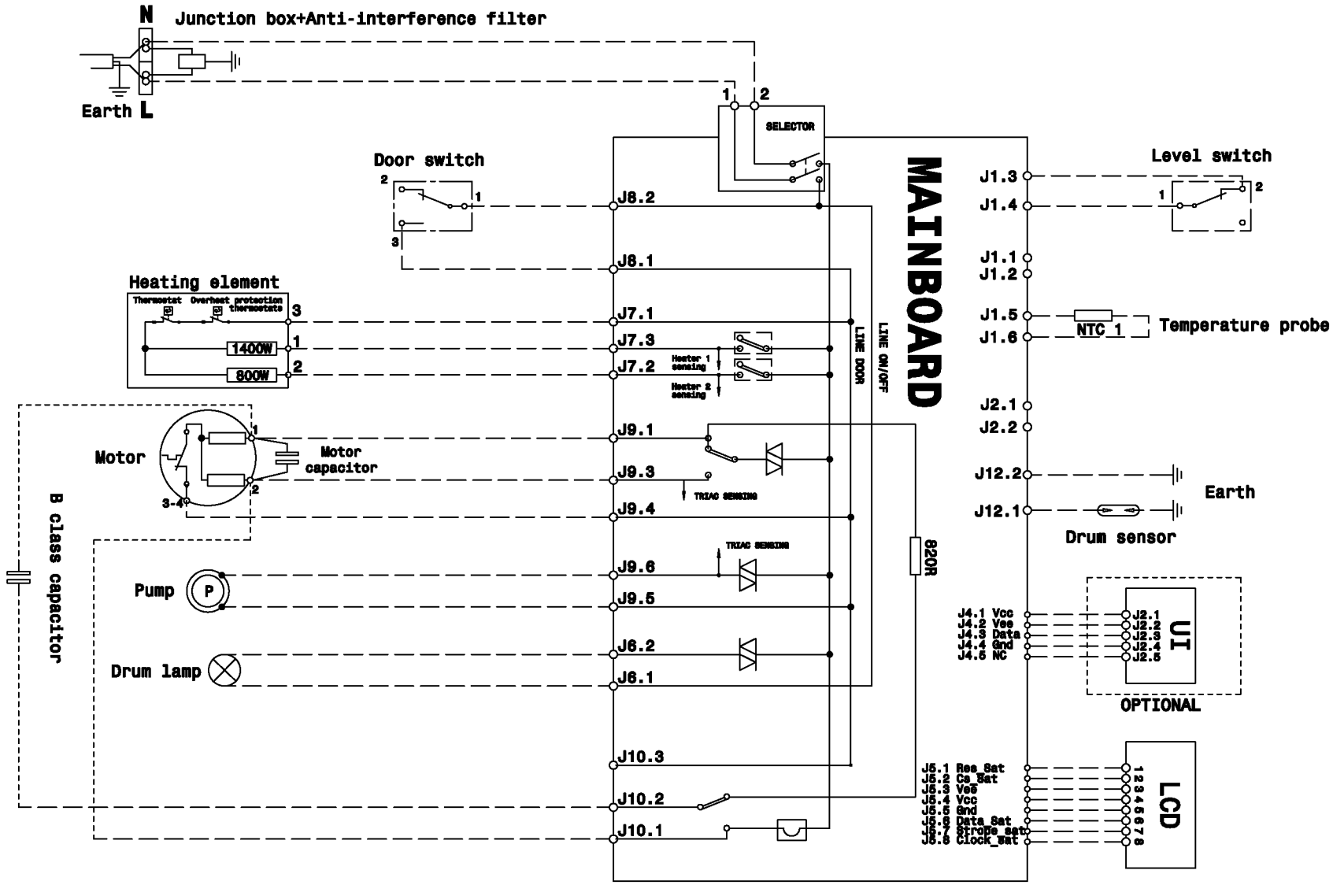
N
Junction box+Anti-interference filter
Earth
L
1
2
SELECTOR
Door switch
2
1
3
J8.2
J8.1
Heating element
Thermostat
Overheat protection thermostats
3
1400W
1
800W
2
J7.1
J7.3
J7.2
Heater 1 sensing
Heater 2 sensing
Motor
1
Motor capacitor
2
3-4
J9.1
J9.3
TRIAC SENSING
J9.4
B class capacitor
Pump
P
J9.6
J9.5
Drum lamp
J6.2
J6.1
J10.3
J10.2
J10.1
LINE DOOR
LINE ON/OFF
MAINBOARD
820R
J1.3
J1.4
Level switch
1
2
J1.1
J1.2
J1.5
J1.6
NTC 1
Temperature probe
J2.1
J2.2
J12.2
J12.1
Earth
Drum sensor
J4.1 Vcc
J4.2 Vee
J4.3 Data
J4.4 Gnd
J4.5 NC
J2.1
J2.2
J2.3
J2.4
J2.5
UI
OPTIONAL
J5.1 Res_Sat
J5.2 Cs_Sat
J5.3 Ves
J5.4 Vcc
J5.5 Gnd
J5.6 Data_Sat
J5.7 Strobe_sat
J5.8 Clock_Sat
1 2 3 4 5 6 7 8
LCD