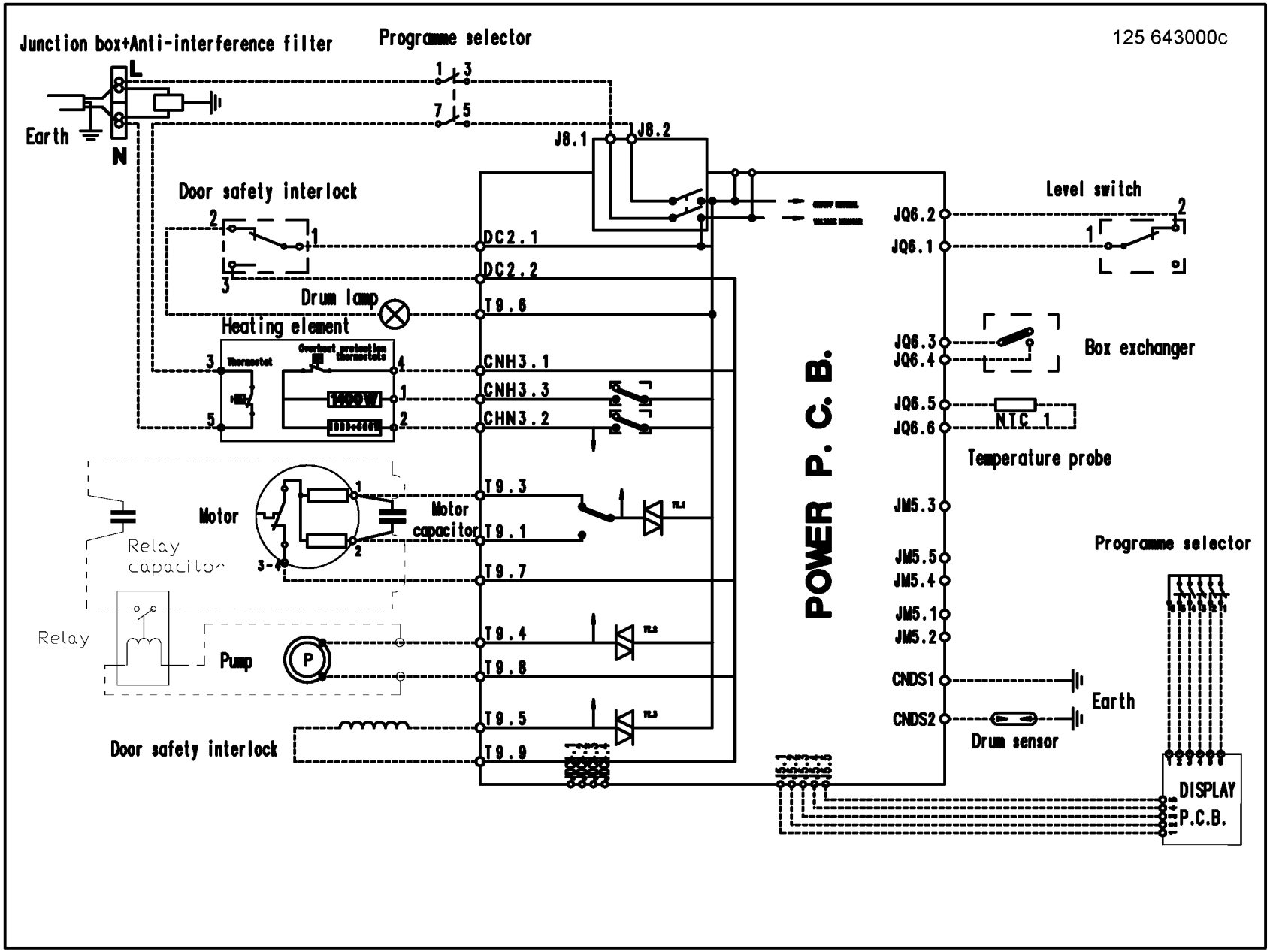
125 643000c
Junction box+Anti-interference filter
Programme selector
L
N
Earth
1
3
7
5
J8.1
J8.2
Door safety interlock
2
1
3
Drum lamp
Heating element
Thermostat
Overheat protection thermostat
3
4
5
1
2
1400W
1000-4000W
Motor
Motor capacitor
Relay capacitor
1
2
3-4
Relay
Pump
P
Door safety interlock
DC2.1
DC2.2
T9.6
CNH3.1
CNH3.3
CHN3.2
T9.3
T9.1
T9.7
T9.4
T9.8
T9.5
T9.9
POWER P. C. B.
JQ6.2
JQ6.1
JQ6.3
JQ6.4
JQ6.5
JQ6.6
JM5.3
JM5.5
JM5.4
JM5.1
JM5.2
CNDS1
CNDS2
Level switch
2
1
3
Box exchanger
NTC 1
Temperature probe
Programme selector
Earth
Drum sensor
DISPLAY P.C.B.