WIRING HARNESSES
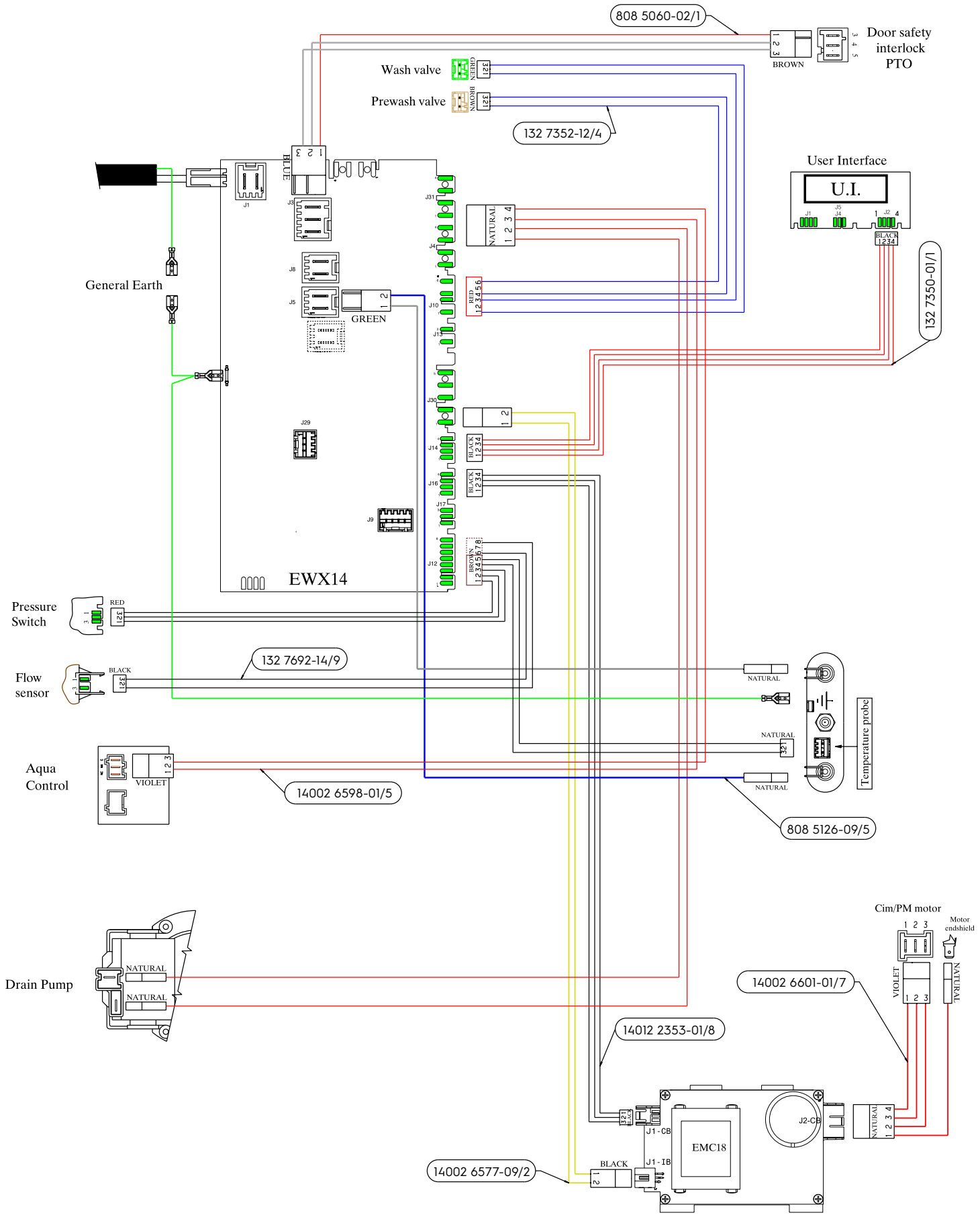
AI2400222_B
P0PLT300000156