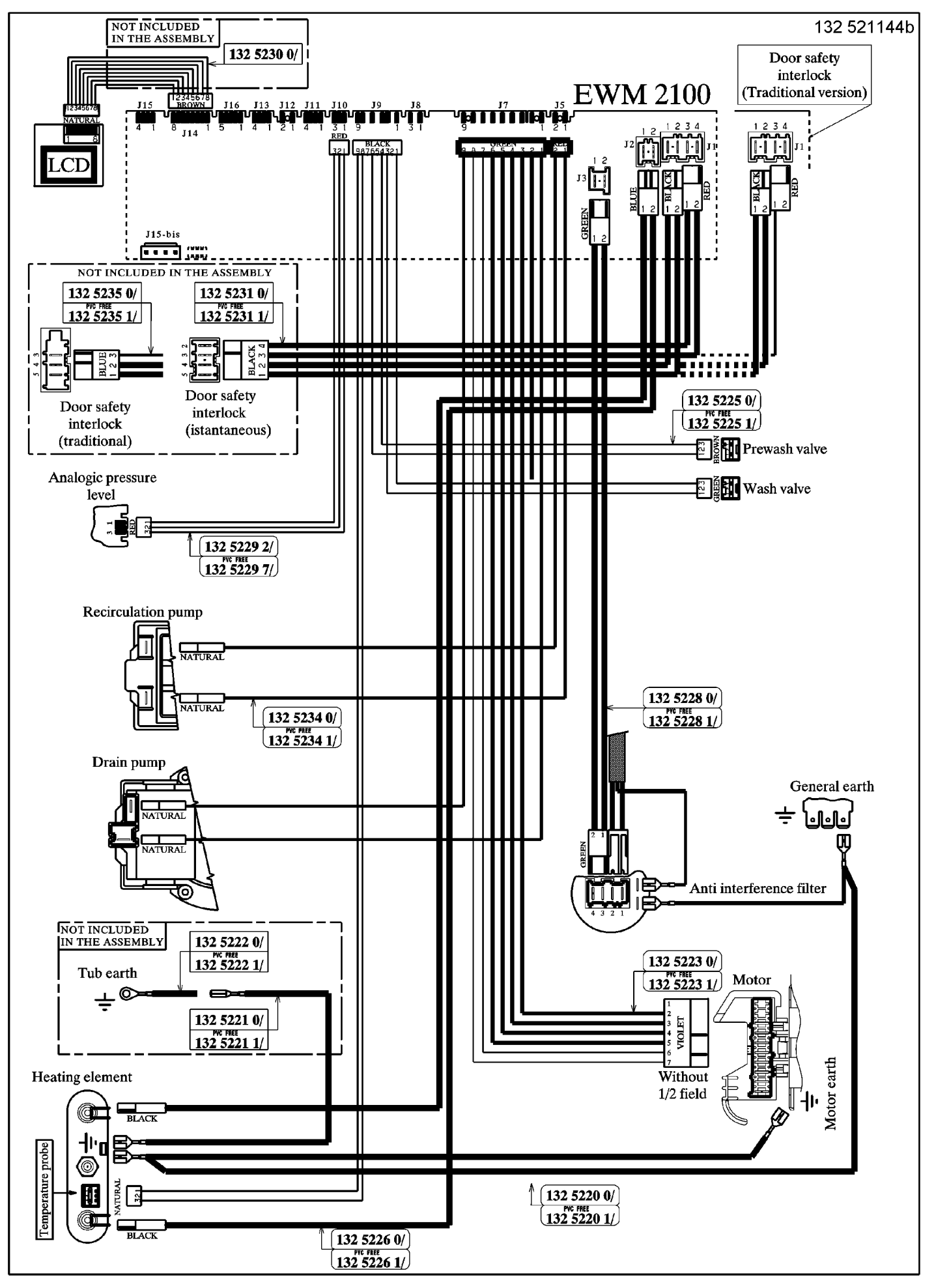
132 521144b
EWM 2100
NOT INCLUDED IN THE ASSEMBLY
132 5230 0/
LCD
NATURAL
BROWN
J15
J14
J16
J13
J12
J11
J10
J9
J8
J7
J5
RED
BLACK
GREEN
J2
J1
J3
BLUE
J15-bis
Door safety interlock (Traditional version)
NOT INCLUDED IN THE ASSEMBLY
132 5235 0/
PVC FREE
132 5235 1/
132 5231 0/
PVC FREE
132 5231 1/
Door safety interlock (traditional)
Door safety interlock (istantaneous)
132 5225 0/
PVC FREE
132 5225 1/
Prewash valve
Wash valve
Analogic pressure level
132 5229 2/
PVC FREE
132 5229 7/
Recirculation pump
132 5234 0/
PVC FREE
132 5234 1/
132 5228 0/
PVC FREE
132 5228 1/
Drain pump
General earth
Anti interference filter
NOT INCLUDED IN THE ASSEMBLY
132 5222 0/
PVC FREE
132 5222 1/
Tub earth
132 5221 0/
PVC FREE
132 5221 1/
132 5223 0/
PVC FREE
132 5223 1/
Motor
VIOLET
Without 1/2 field
Motor earth
Heating element
Temperature probe
132 5220 0/
PVC FREE
132 5220 1/
132 5226 0/
PVC FREE
132 5226 1/