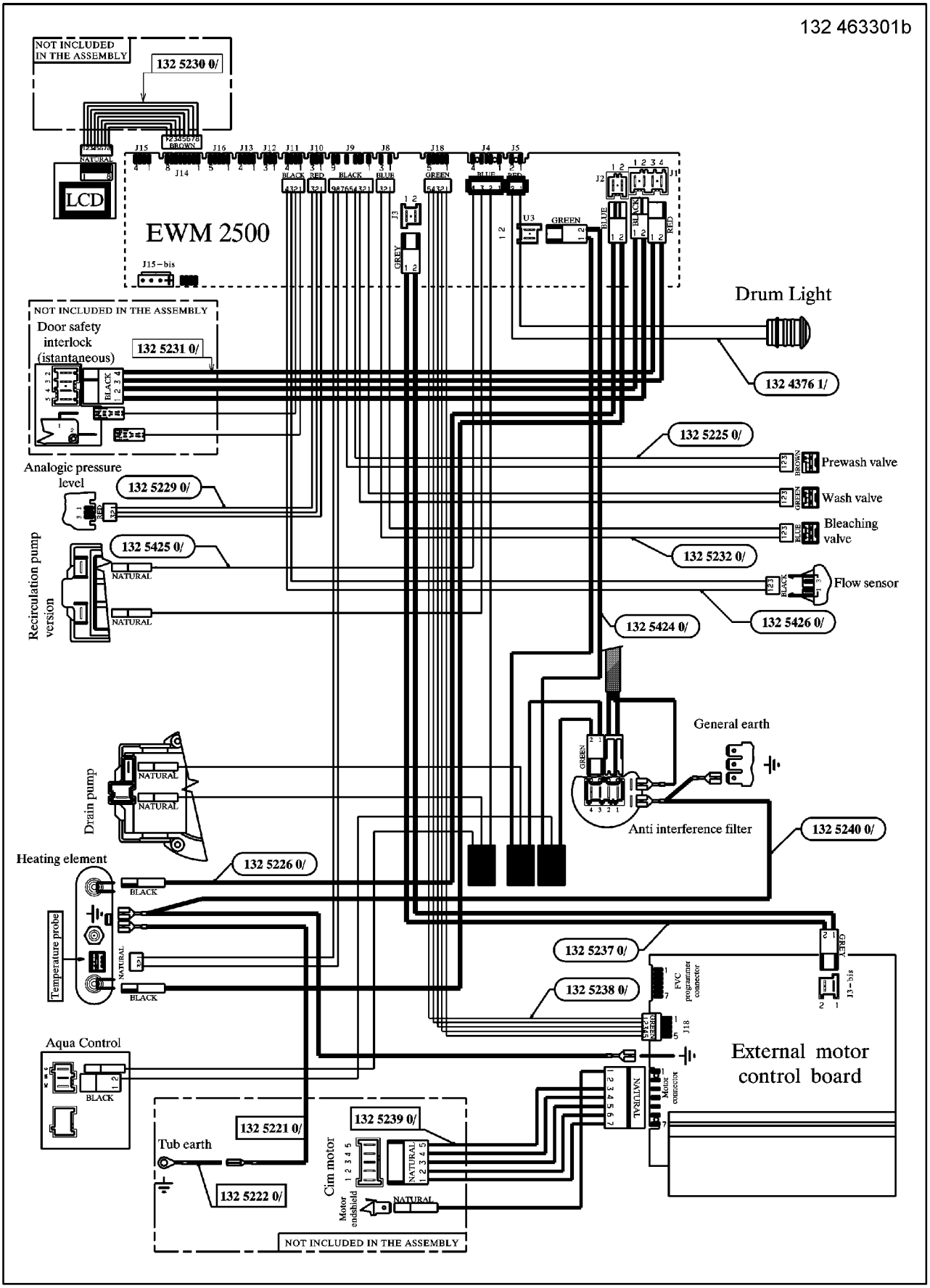
NOT INCLUDED IN THE ASSEMBLY
132 5230 0/
LCD
EWM 2500
J15
J16
J13
J12
J11
J10
J9
J8
J18
J4
J5
J14
J15-bis
J2
J1
J3
U3
NOT INCLUDED IN THE ASSEMBLY
Door safety interlock (istantaneous)
132 5231 0/
Drum Light
132 4376 1/
132 5225 0/
Prewash valve
Wash valve
Bleaching valve
Analogic pressure level
132 5229 0/
132 5425 0/
Recirculation pump version
132 5232 0/
Flow sensor
132 5426 0/
132 5424 0/
General earth
Anti interference filter
132 5240 0/
Drain pump
Heating element
132 5226 0/
Temperature probe
132 5237 0/
132 5238 0/
FVC programmer connector
J18
J3-bis
Aqua Control
External motor control board
Motor connector
132 5221 0/
132 5239 0/
Tub earth
Cim motor
132 5222 0/
Motor endshield
NOT INCLUDED IN THE ASSEMBLY