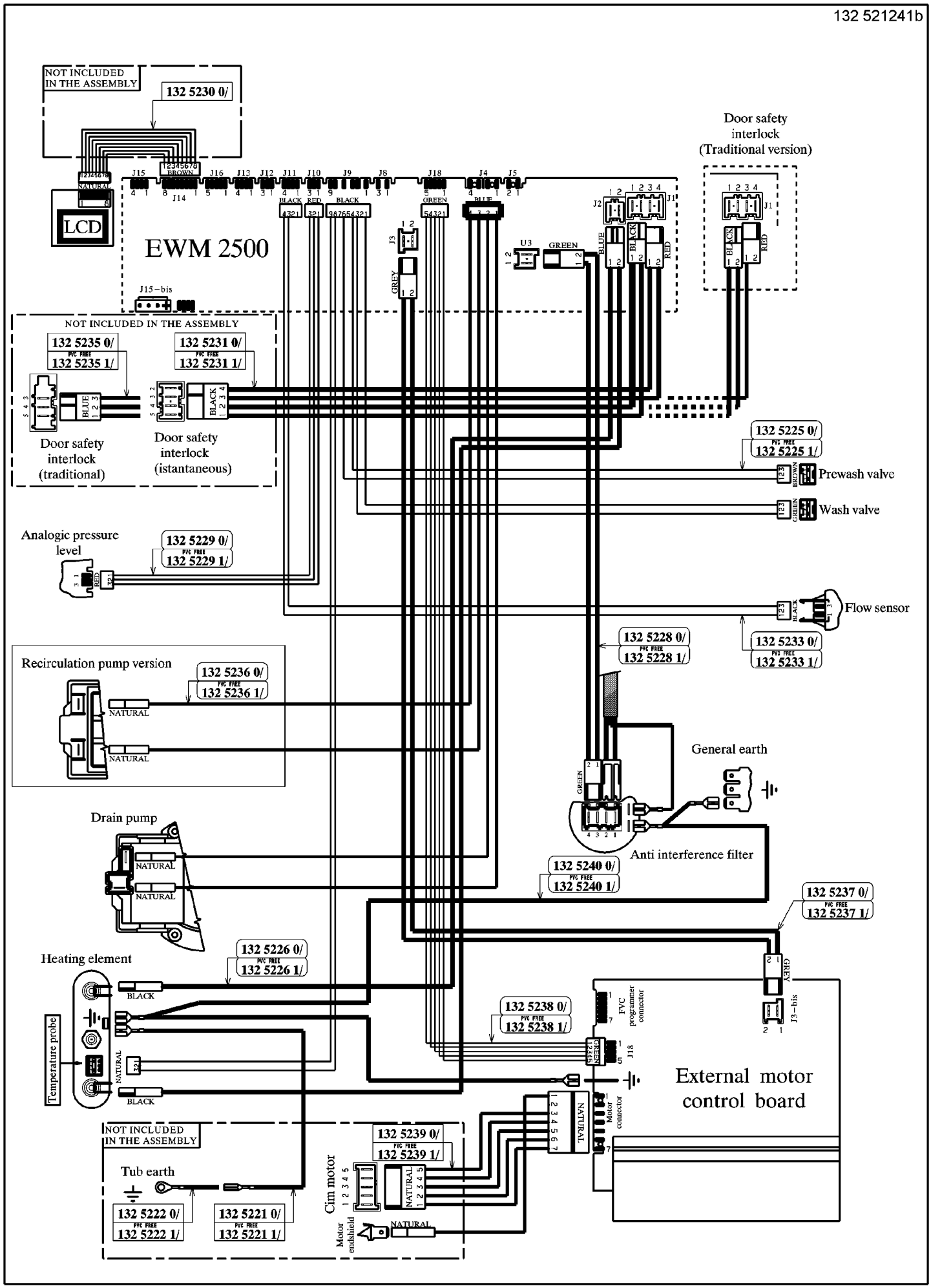
NOT INCLUDED IN THE ASSEMBLY
132 5230 0/
LCD
EWM 2500
J15
J16
J13
J12
J11
J10
J9
J8
J18
J4
J5
J14
J15-bis
J3
U3
GREY
GREEN
BLUE
BLACK
RED
BROWN
NATURAL
Door safety interlock (Traditional version)
NOT INCLUDED IN THE ASSEMBLY
132 5235 0/
PVC FREE
132 5235 1/
132 5231 0/
PVC FREE
132 5231 1/
Door safety interlock (traditional)
Door safety interlock (istantaneous)
132 5225 0/
PVC FREE
132 5225 1/
Prewash valve
Wash valve
Analogic pressure level
132 5229 0/
PVC FREE
132 5229 1/
Flow sensor
132 5228 0/
PVC FREE
132 5228 1/
132 5233 0/
PVC FREE
132 5233 1/
Recirculation pump version
132 5236 0/
PVC FREE
132 5236 1/
General earth
Anti interference filter
Drain pump
132 5240 0/
PVC FREE
132 5240 1/
132 5237 0/
PVC FREE
132 5237 1/
Heating element
132 5226 0/
PVC FREE
132 5226 1/
Temperature probe
132 5238 0/
PVC FREE
132 5238 1/
FVC programmer connector
J18
J3-bis
External motor control board
Motor connector
NOT INCLUDED IN THE ASSEMBLY
Tub earth
132 5222 0/
PVC FREE
132 5222 1/
132 5221 0/
PVC FREE
132 5221 1/
132 5239 0/
PVC FREE
132 5239 1/
Cim motor
Motor endshield