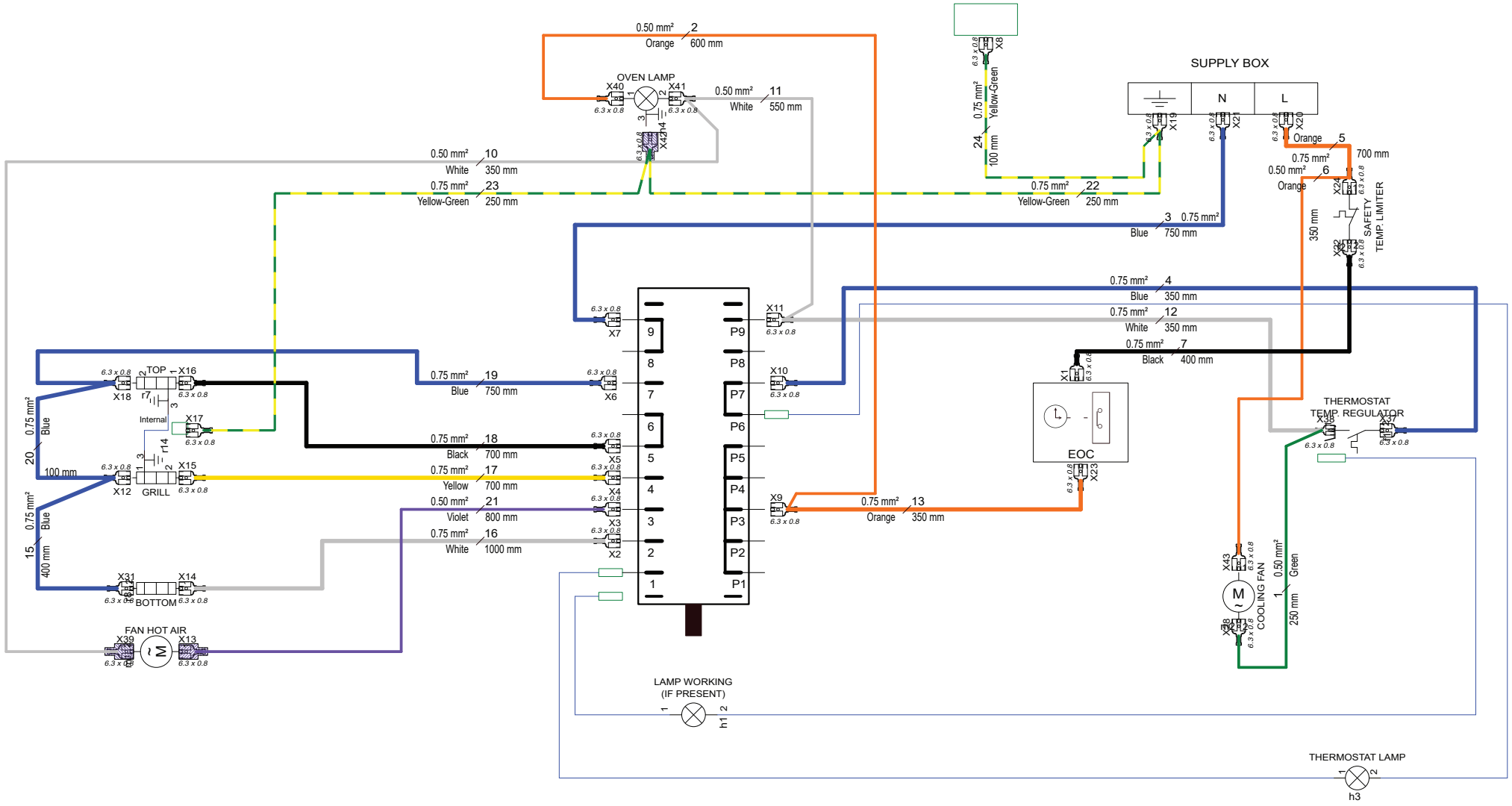
SUPPLY BOX
N
L
OVEN LAMP
X40
X41
X42
X14
0.50 mm² 2 Orange 600 mm
0.50 mm² 11 White 550 mm
0.50 mm² 10 White 350 mm
0.75 mm² 23 Yellow-Green 250 mm
0.75 mm² 24 Yellow-Green 100 mm
X8
X19
X21
X20
0.75 mm² 22 Yellow-Green 250 mm
0.75 mm² 3 Blue 750 mm
Orange 5 700 mm
0.75 mm²
0.50 mm² 6 Orange 350 mm
X24
X22
SAFETY TEMP. LIMITER
0.75 mm² 4 Blue 350 mm
0.75 mm² 12 White 350 mm
0.75 mm² 7 Black 400 mm
X7
X11
X10
X1
EOC
X23
X9
0.75 mm² 13 Orange 350 mm
THERMOSTAT TEMP. REGULATOR
X36
X37
X18
TOP
X16
r7
Internal
X17
r14
X12
GRILL
X15
X31
BOTTOM
X14
0.75 mm² 19 Blue 750 mm
0.75 mm² 18 Black 700 mm
0.75 mm² 17 Yellow 700 mm
0.50 mm² 21 Violet 800 mm
0.75 mm² 16 White 1000 mm
X6
X5
X4
X3
X2
0.75 mm² 20 Blue 100 mm
0.75 mm² 15 Blue 400 mm
FAN HOT AIR
X39
X13
M
X43
X38
COOLING FAN
0.50 mm² 1 Green 250 mm
LAMP WORKING (IF PRESENT)
h1
THERMOSTAT LAMP
h3
P1
P2
P3
P4
P5
P6
P7
P8
P9
6.3 x 0.8

A21092601