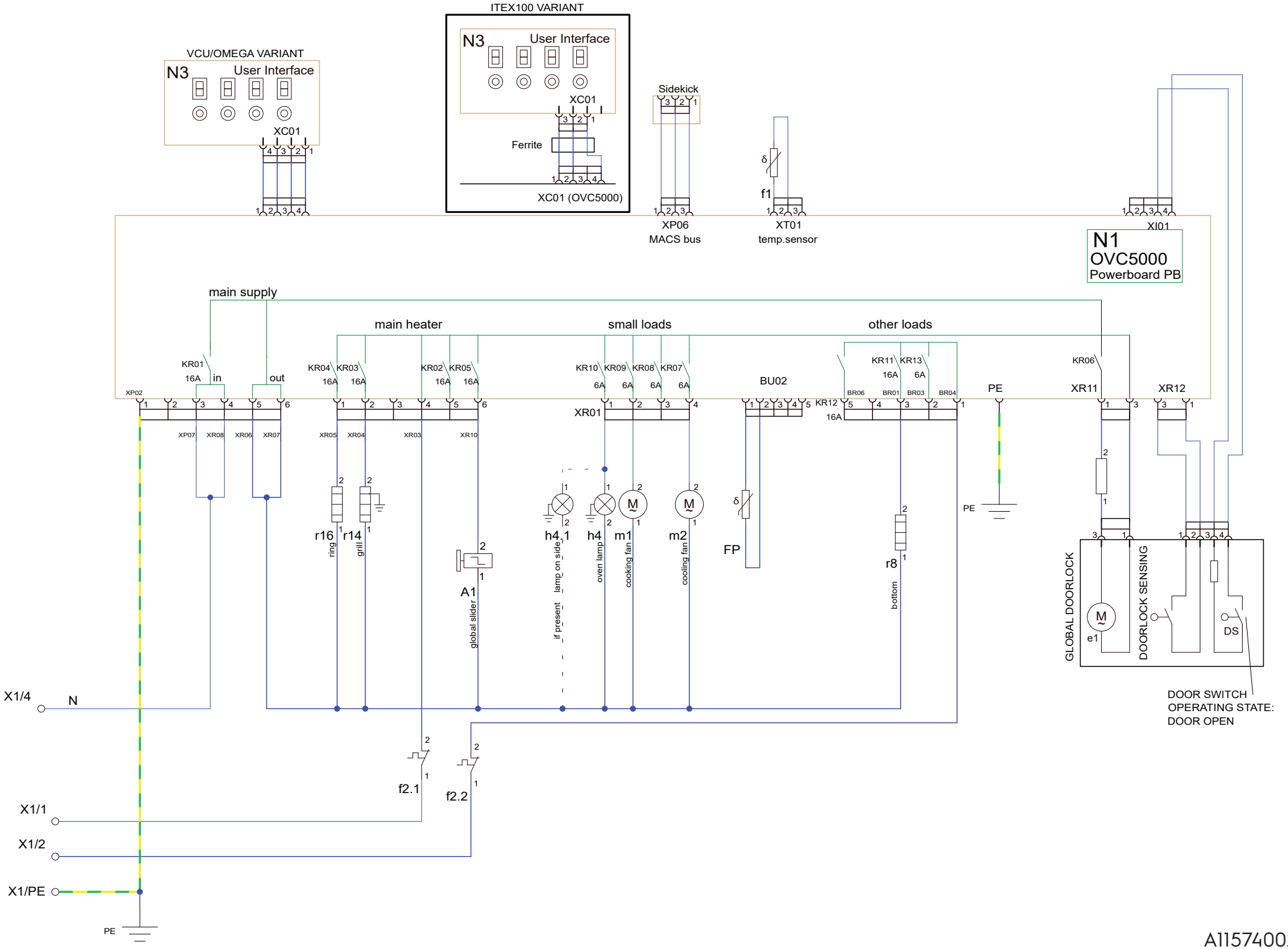
ITEX100 VARIANT
N3
User Interface
XC01
Ferrite
XC01 (OVC5000)
VCU/OMEGA VARIANT
N3
User Interface
XC01
Sidekick
XP06
MACS bus
f1
XT01
temp.sensor
XI01
N1
OVC5000
Powerboard PB
main supply
main heater
small loads
other loads
KR01
16A
in
out
KR04
KR03
16A
16A
KR02
KR05
16A
16A
KR10
KR09
KR08
KR07
6A
6A
6A
6A
BU02
KR11
KR13
16A
6A
KR12
16A
KR06
PE
XR11
XR12
XP02
XP07
XR08
XR06
XR07
XR05
XR04
XR03
XR10
XR01
BR06
BR01
BR03
BR04
r16
ring
r14
grill
A1
global slider
h4.1
lamp on side
if present
h4
oven lamp
m1
cooking fan
m2
cooling fan
FP
r8
bottom
PE
GLOBAL DOORLOCK
e1
DOORLOCK SENSING
DS
DOOR SWITCH
OPERATING STATE:
DOOR OPEN
X1/4
N
f2.1
f2.2
X1/1
X1/2
X1/PE
PE

A11574002