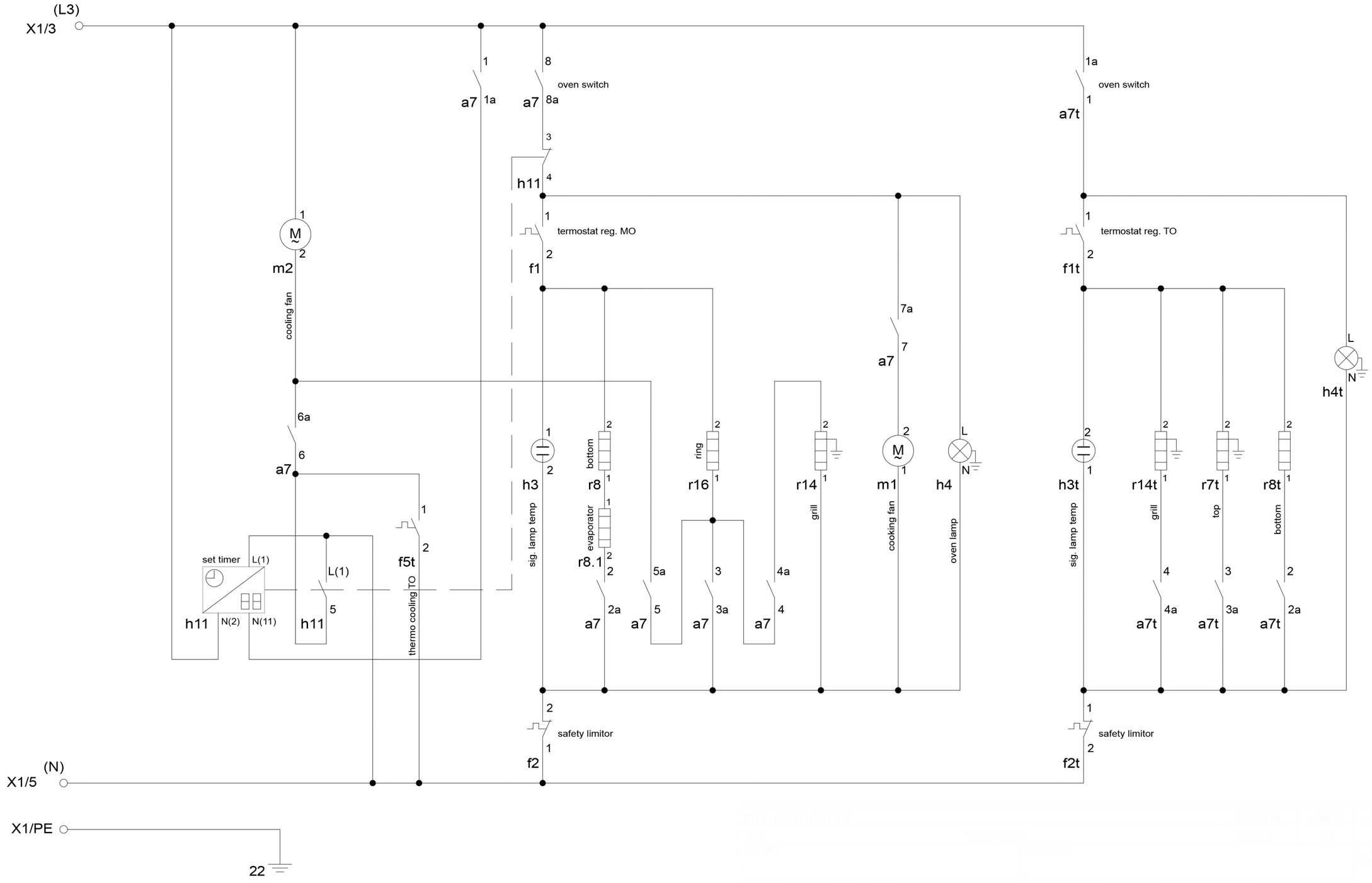

(L3)
X1/3
oven switch
a7
a7t
h11
termostat reg. MO
termostat reg. TO
f1
f1t
m2
cooling fan
a7
h3
sig. lamp temp
r8
bottom
r8.1
evaporator
r16
ring
r14
grill
m1
cooking fan
h4
oven lamp
h4t
h3t
r14t
r7t
top
r8t
set timer
L(1)
N(2)
N(11)
f5t
thermo cooling TO
safety limitor
f2
f2t
(N)
X1/5
X1/PE
22

A13294203