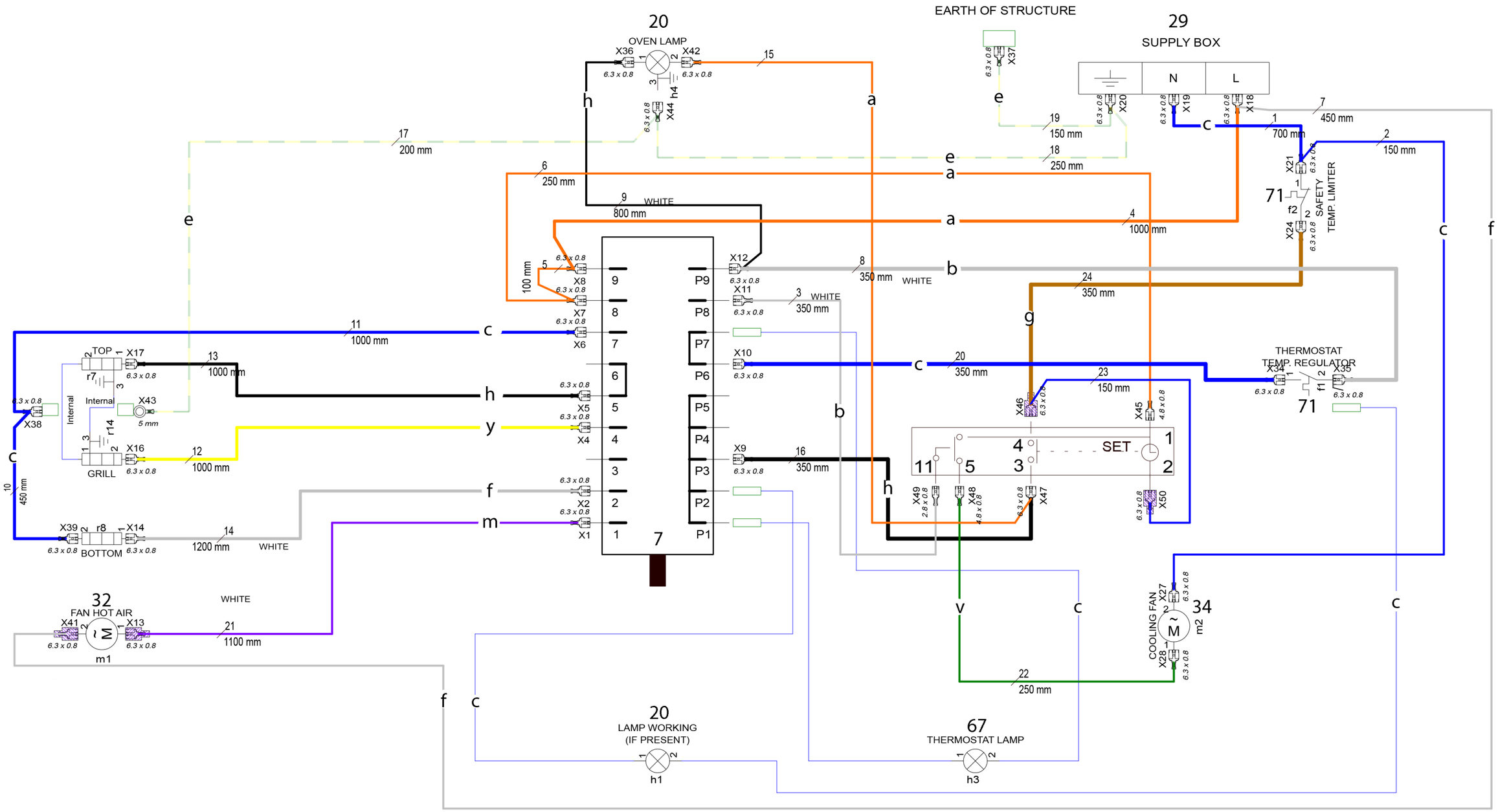
20
OVEN LAMP
X36
X42
X44
h4
EARTH OF STRUCTURE
X37
29
SUPPLY BOX
N
L
X20
X19
X18
X21
X24
71
f2
SAFETY
TEMP. LIMITER
X12
X11
X10
X9
X8
X7
X6
X5
X4
X2
X1
P9
P8
P7
P6
P5
P4
P3
P2
P1
7
TOP
X17
r7
Internal
X43
5 mm
r14
X16
GRILL
X38
X39
r8
X14
BOTTOM
32
FAN HOT AIR
X41
X13
m1
WHITE
THERMOSTAT
TEMP. REGULATOR
X34
X35
f1
SET
X46
X45
X49
X48
X47
X50
COOLING FAN
X27
X28
34
m2
20
LAMP WORKING
(IF PRESENT)
h1
67
THERMOSTAT LAMP
h3
1 700 mm
2 150 mm
3 350 mm
4 1000 mm
5 100 mm
6 250 mm
7 450 mm
8 350 mm
9 800 mm
10 450 mm
11 1000 mm
12 1000 mm
13 1000 mm
14 1200 mm
15
16 350 mm
17 200 mm
18 250 mm
19 150 mm
20 350 mm
21 1100 mm
22 250 mm
23 150 mm
24 350 mm

A13012301