Ariane steam combi

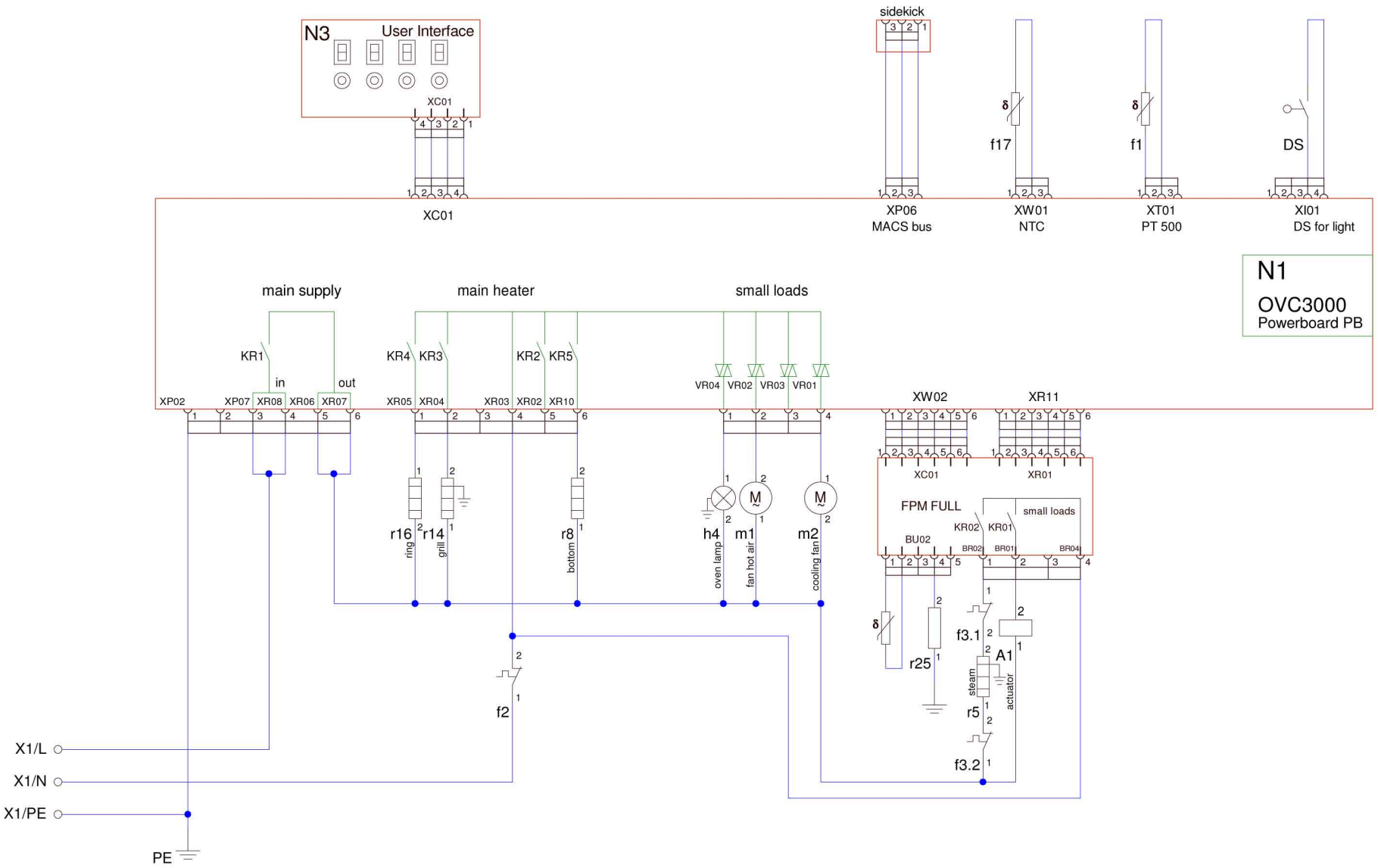

A02213801