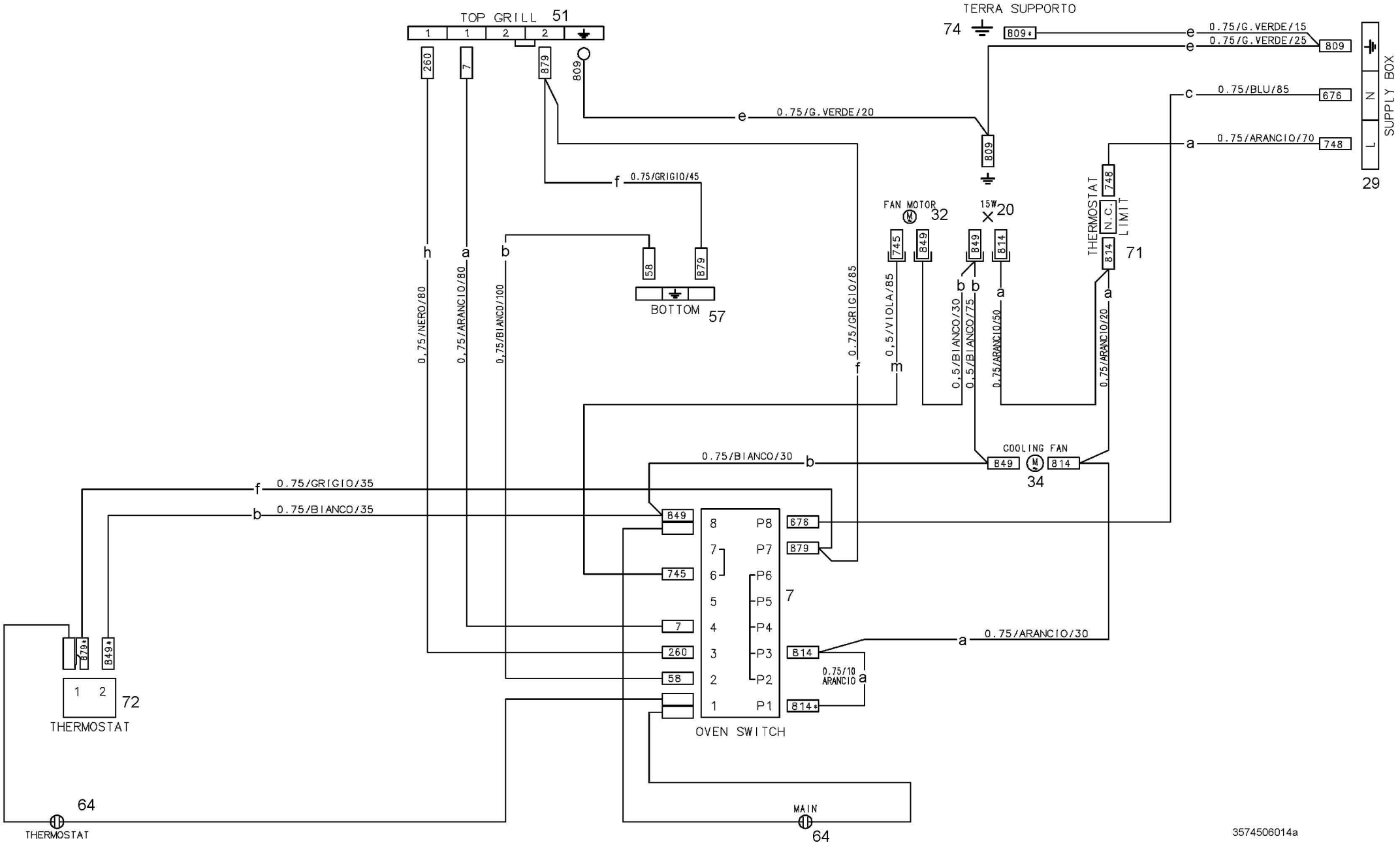
TOP GRILL 51
TERRA SUPPORTO
74
809*
0.75/G.VERDE/15
0.75/G.VERDE/25
809
SUPPLY BOX
N
L
29
0.75/BLU/85
676
0.75/ARANCIO/70
748
0.75/G.VERDE/20
0.75/GRIGIO/45
FAN MOTOR
32
15W
20
THERMOSTAT
N.C.
LIMIT
71
BOTTOM
57
0,75/NERO/80
0,75/ARANCIO/80
0,75/BIANCO/100
0.75/GRIGIO/85
0,5/VIOLA/85
0,5/BIANCO/30
0,5/BIANCO/75
0.75/ARANCIO/50
0.75/ARANCIO/20
COOLING FAN
34
0.75/BIANCO/30
0.75/GRIGIO/35
0.75/BIANCO/35
OVEN SWITCH
7
0.75/ARANCIO/30
0.75/10 ARANCIO
THERMOSTAT
72
64
THERMOSTAT
MAIN
64
3574506014a