808097001b

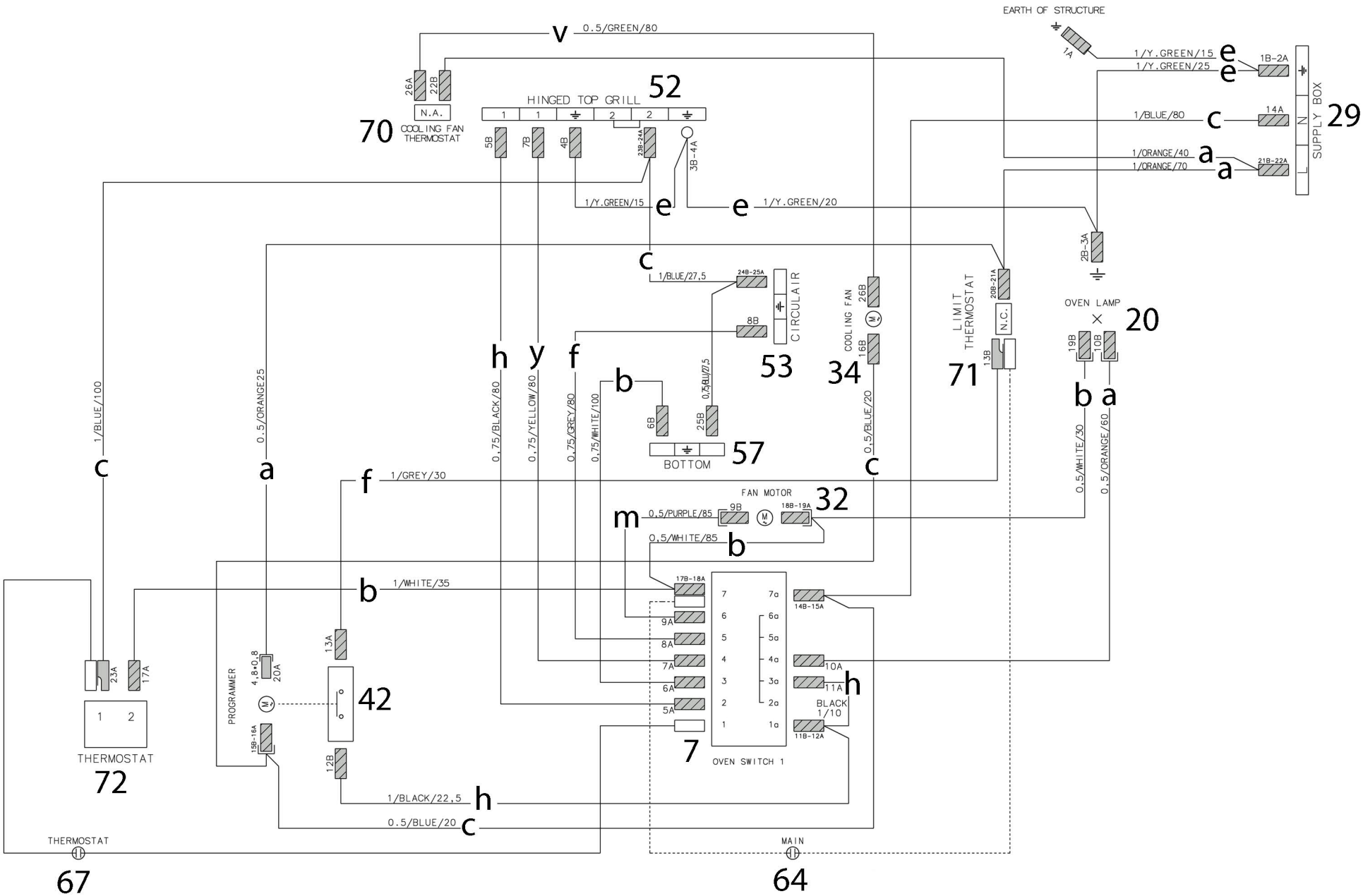
74
EARTH OF STRUCTURE
1A
1/Y.GREEN/15
1/Y.GREEN/25
1B-2A
SUPPLY BOX
29
1/BLUE/80
14A
1/ORANGE/40
1/ORANGE/70
21B-22A
0.5/GREEN/80
26A
22B
N.A.
COOLING FAN THERMOSTAT
70
HINGED TOP GRILL
52
5B
7B
4B
23B-24A
3B-4A
1/Y.GREEN/15
1/Y.GREEN/20
2B-3A
1/BLUE/27,5
24B-25A
8B
CIRCULAIR
53
COOLING FAN
26B
16B
34
LIMIT THERMOSTAT
20B-21A
N.C.
13B
71
OVEN LAMP
20
19B
10B
1/BLUE/100
0.5/ORANGE25
0,75/BLACK/80
0,75/YELLOW/80
0,75/GREY/80
0,75/WHITE/100
0,75/BLUE/27,5
6B
25B
BOTTOM
57
0.5/BLUE/20
0.5/WHITE/30
0.5/ORANGE/60
1/GREY/30
FAN MOTOR
32
9B
18B-19A
0.5/PURPLE/85
0.5/WHITE/85
1/WHITE/35
17B-18A
9A
8A
7A
6A
5A
14B-15A
10A
11A
BLACK 1/10
11B-12A
OVEN SWITCH 1
7
13A
12B
42
PROGRAMMER
4,8+0,8
20A
15B-16A
23A
17A
THERMOSTAT
72
1/BLACK/22,5
0.5/BLUE/20
THERMOSTAT
67
MAIN
64