Ariane Multifunction

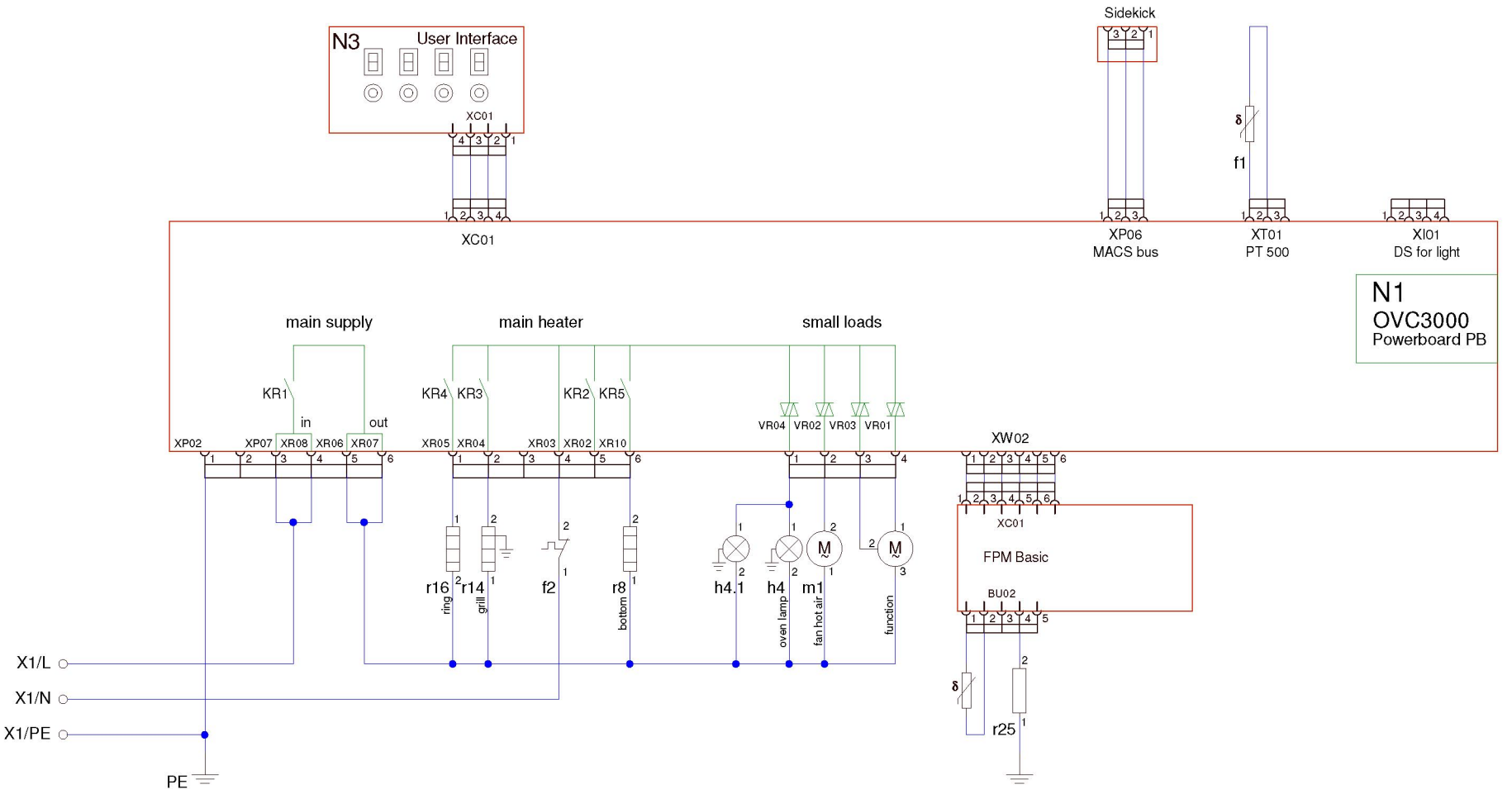

808504501