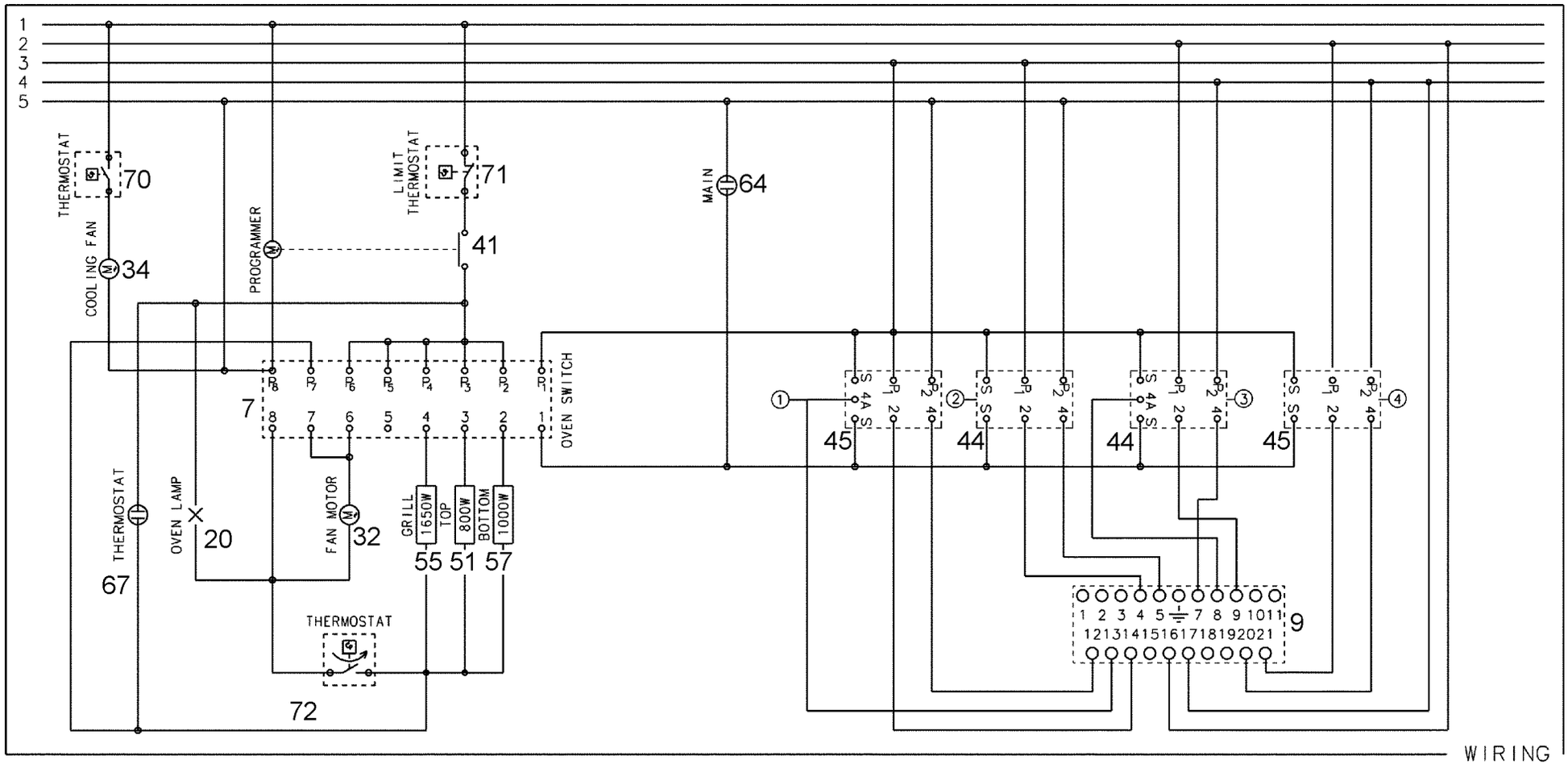

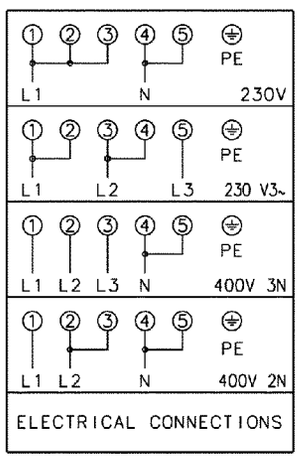

SINGLE ENERGY REGULATOR 2|4

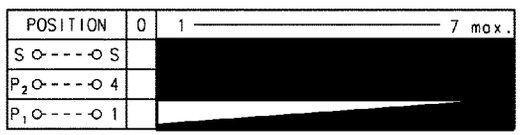

DOUBLE ENERGY REGULATOR 1|3

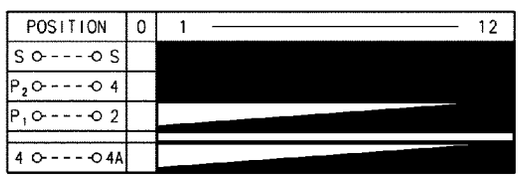

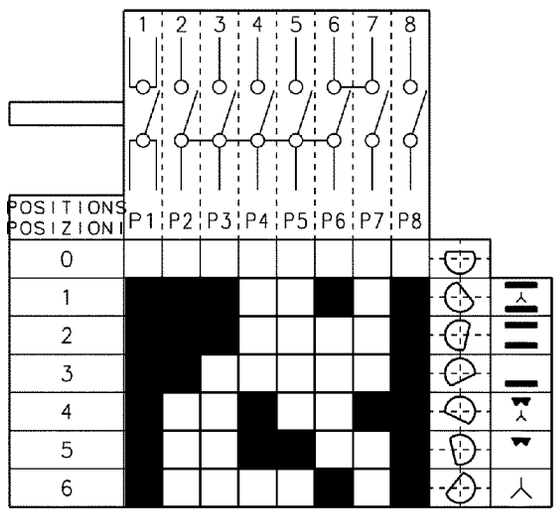

OVEN SWITCH

357495101a