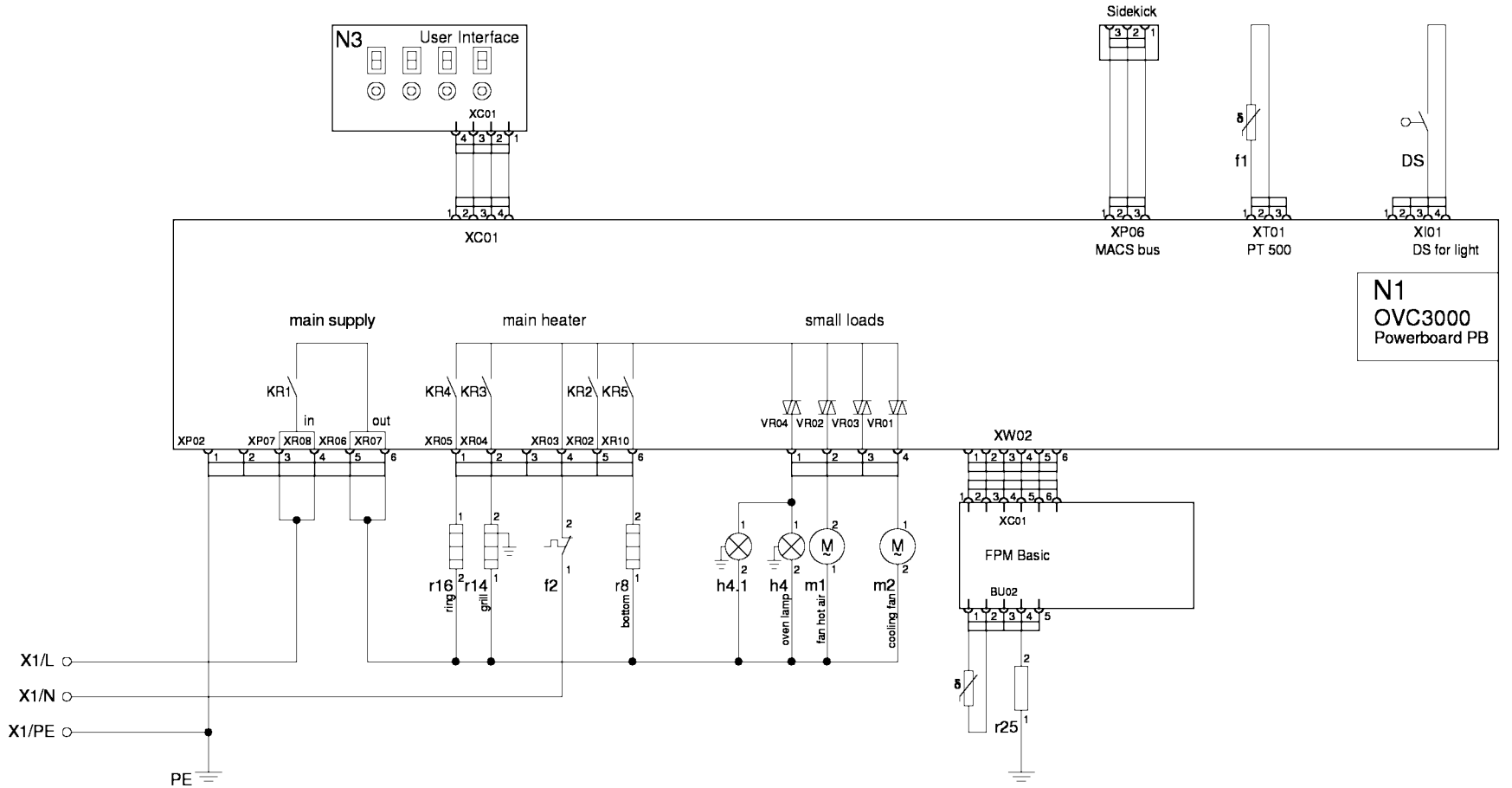
N3
User Interface
XC01
XC01
Sidekick
XP06
MACS bus
f1
XT01
PT 500
DS
XI01
DS for light
N1
OVC3000
Powerboard PB
main supply
main heater
small loads
KR1
in
out
KR4
KR3
KR2
KR5
VR04
VR02
VR03
VR01
XP02
XP07
XR08
XR06
XR07
XR05
XR04
XR03
XR02
XR10
XW02
XC01
FPM Basic
BU02
r16
ring
r14
grill
f2
r8
bottom
h4.1
h4
oven lamp
m1
fan hot air
m2
cooling fan
r25
X1/L
X1/N
X1/PE
PE

555020700