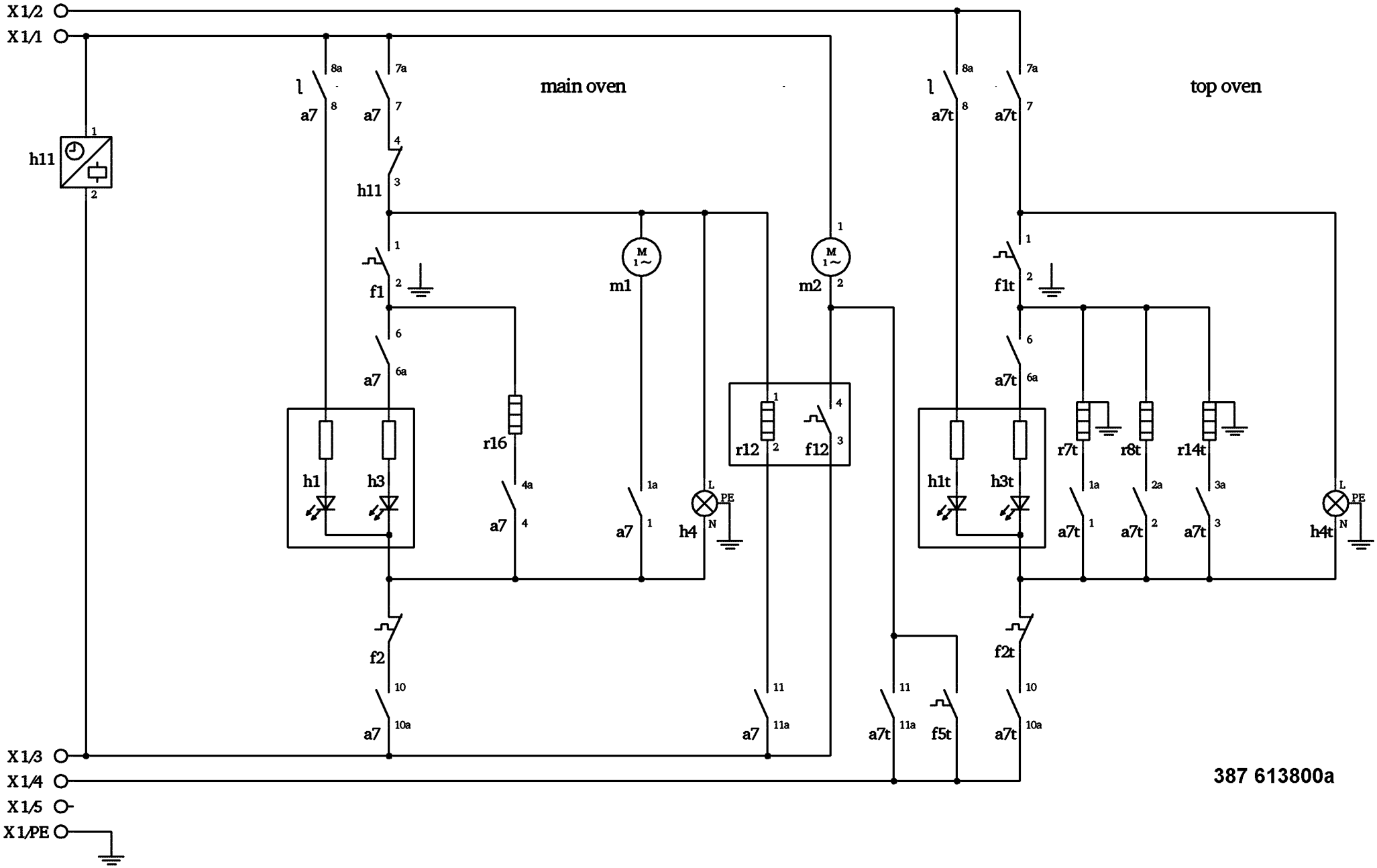
X1/2
X1/1
X1/3
X1/4
X1/5
X1/PE
h11
main oven
top oven
a7
a7t
f1
f1t
f2
f2t
f5t
m1
m2
r16
r12
f12
r7t
r8t
r14t
h1
h3
h1t
h3t
h4
h4t
387 613800a