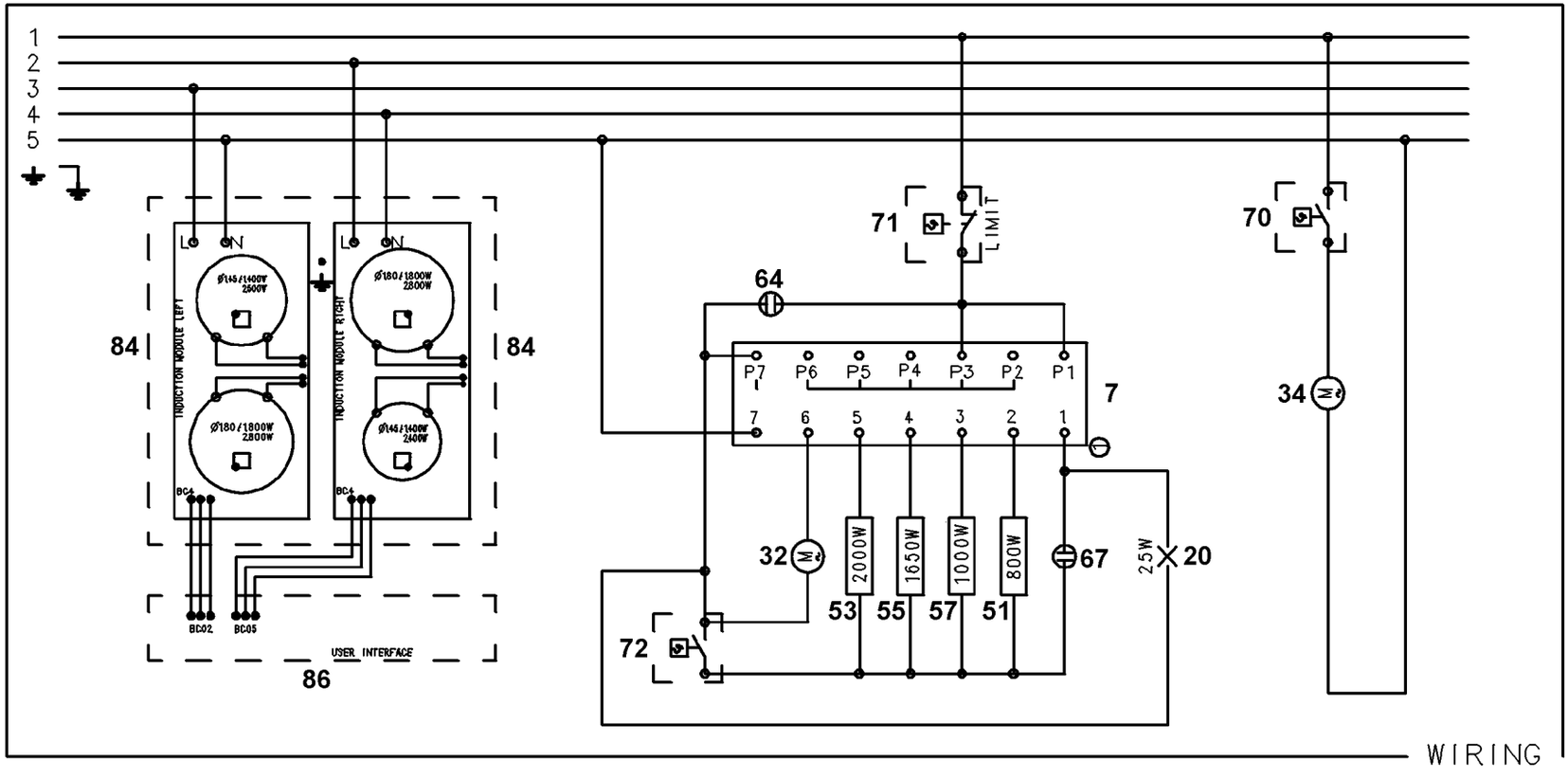
1
2
3
4
5
84
84
INDUCTION MODULE LEFT
INDUCTION MODULE RIGHT
Ø145/1400W 2600W
Ø180/1800W 2800W
Ø180/1800W 2800W
Ø145/1400W 2600W
BC4
BC4
BC02
BC05
USER INTERFACE
86
71
LIMIT
64
P7 P6 P5 P4 P3 P2 P1
7 6 5 4 3 2 1
7
32
2000W
1650W
1000W
800W
53 55 57 51
67
25W
20
72
70
34
WIRING

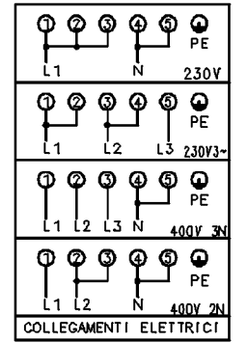
PE
L1
N
230V
PE
L1 L2 L3
230V3~
PE
L1 L2 L3 N
400V 3N
PE
L1 L2 N
400V 2N
COLLEGAMENTI ELETTRICI

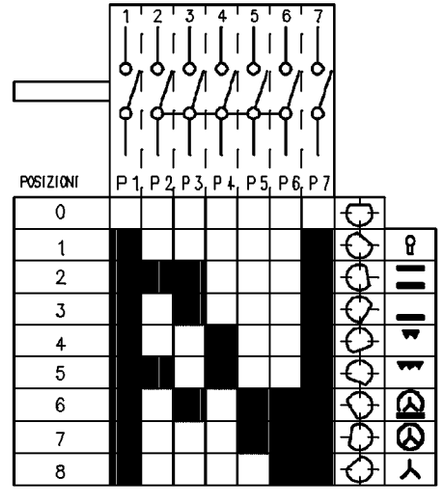
1 2 3 4 5 6 7
POSIZIONI
P1 P2 P3 P4 P5 P6 P7
0
1
2
3
4
5
6
7
8

357 435101a