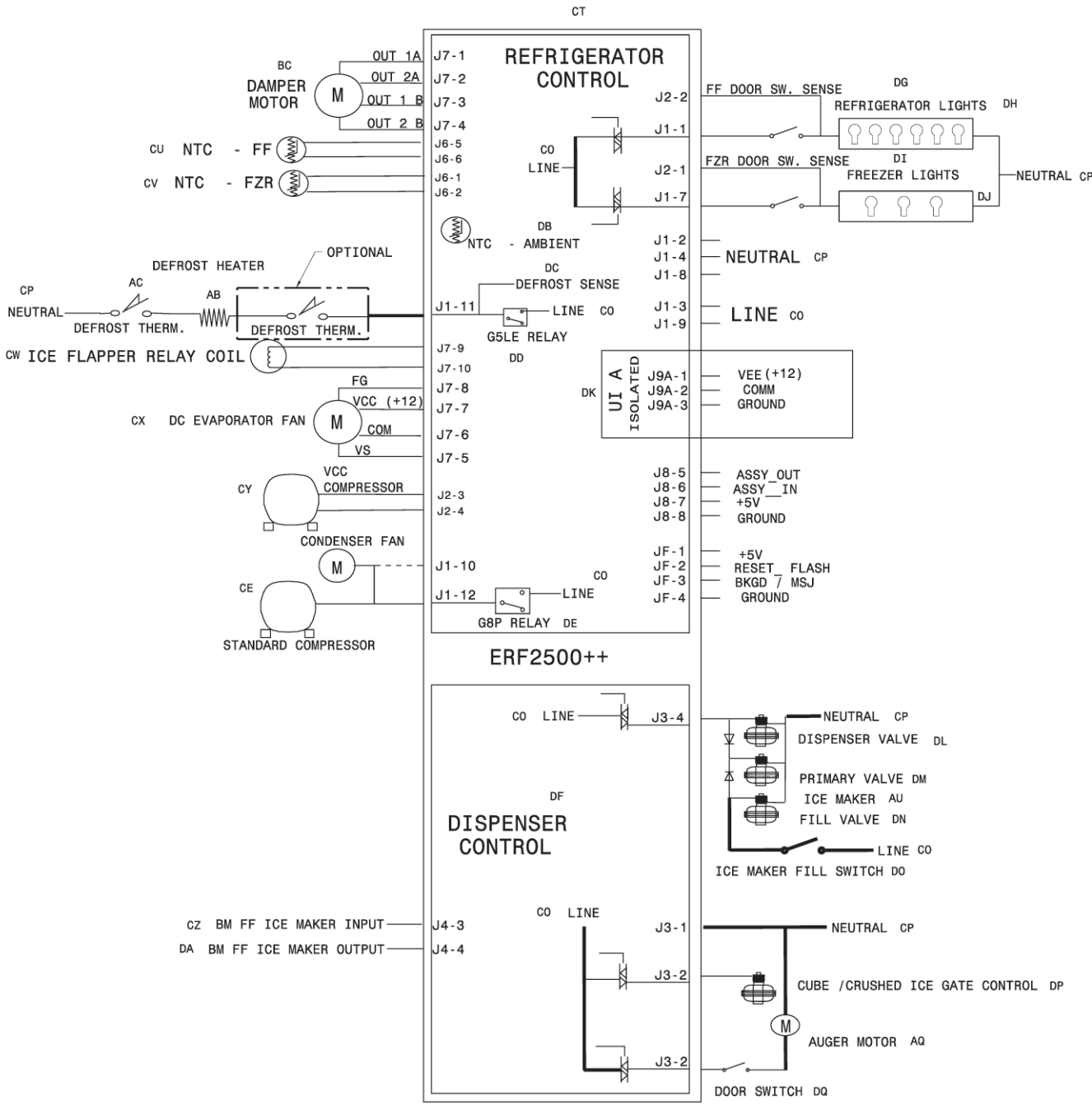

P0MXP300000009