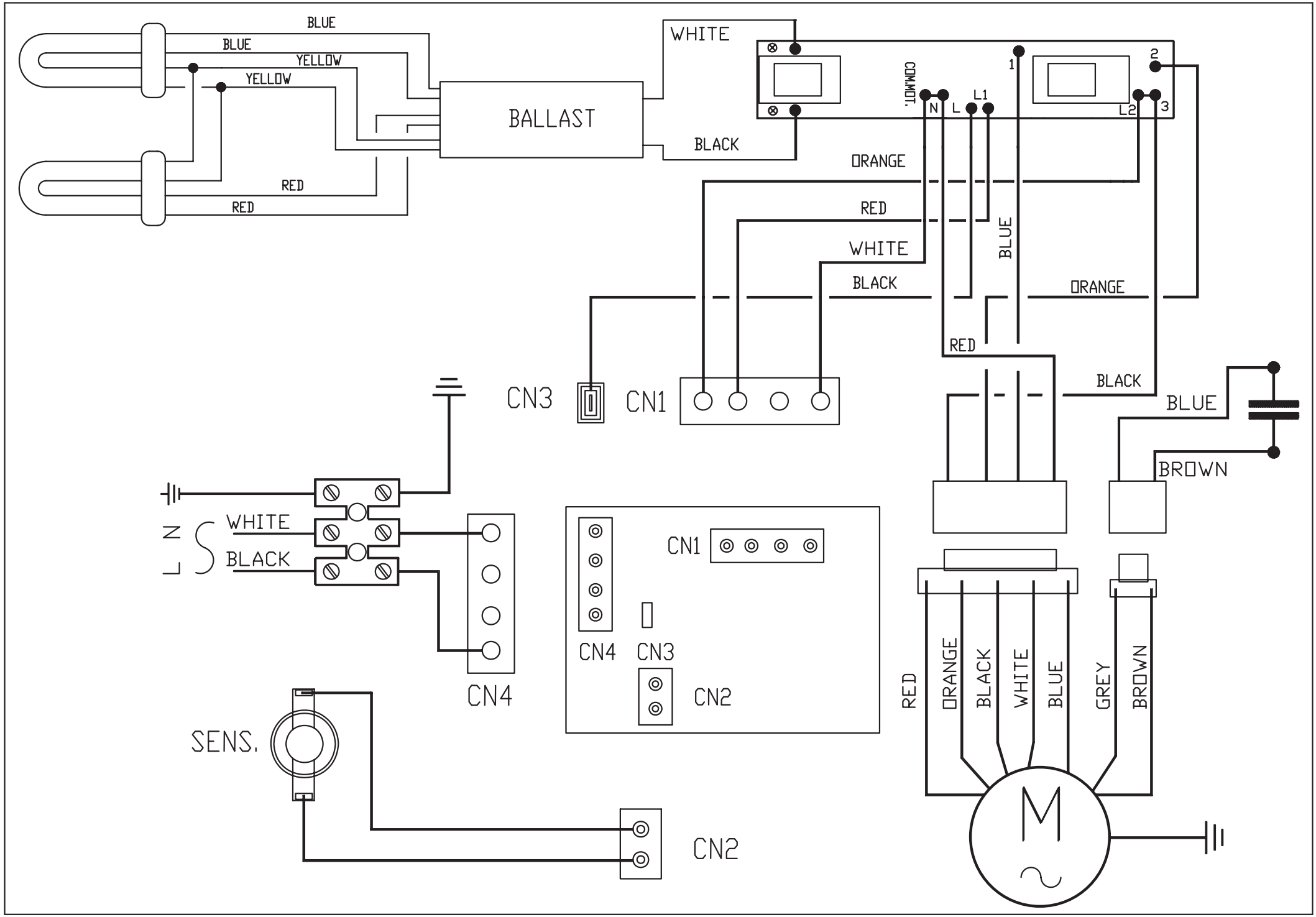
BLUE
BLUE
YELLOW
YELLOW
RED
RED
BALLAST
WHITE
BLACK
COMM.MOT.
N
L
L1
1
2
L2
3
ORANGE
RED
WHITE
BLACK
BLUE
ORANGE
RED
BLACK
BLUE
BROWN
CN3
CN1
L N
WHITE
BLACK
CN4
CN1
CN4
CN3
CN2
SENS.
CN2
RED
ORANGE
BLACK
WHITE
BLUE
GREY
BROWN
M