8105

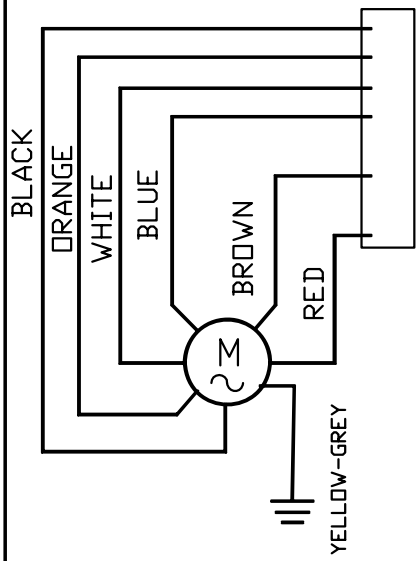
BLACK
ORANGE
WHITE
BLUE
BROWN
RED
M
YELLOW-GREY

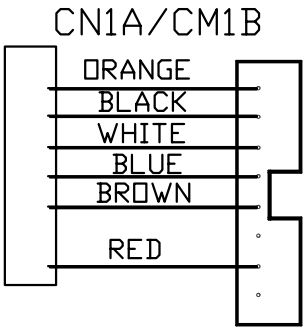
CN1A/CM1B
ORANGE
BLACK
WHITE
BLUE
BROWN
RED

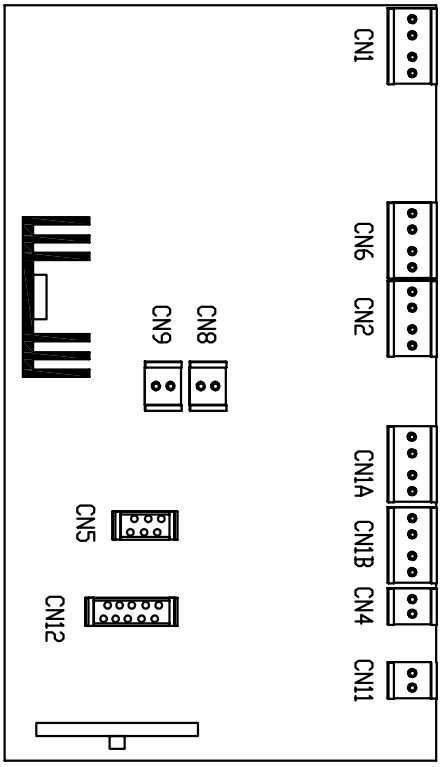
CN1
CN6
CN2
CN9
CN8
CN1A
CN1B
CN4
CN11
CN5
CN12

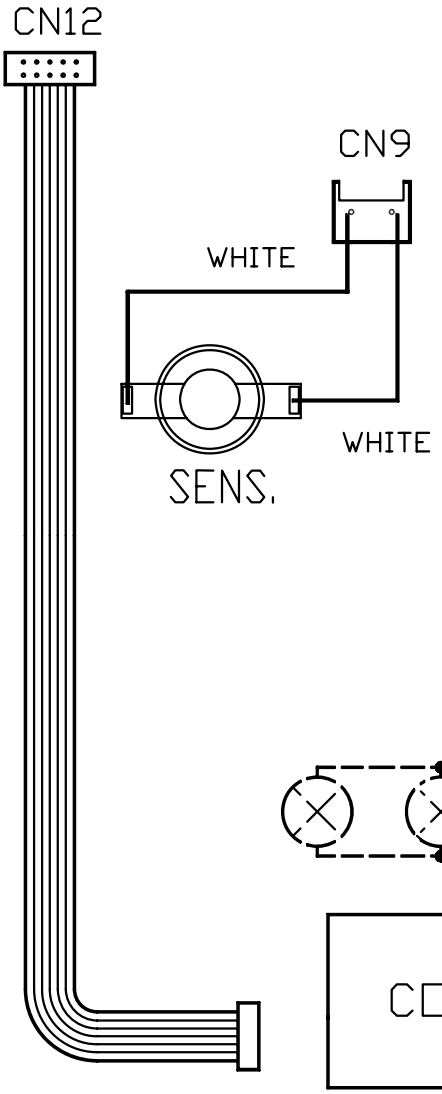
CN12
CN9
WHITE
WHITE
SENS.

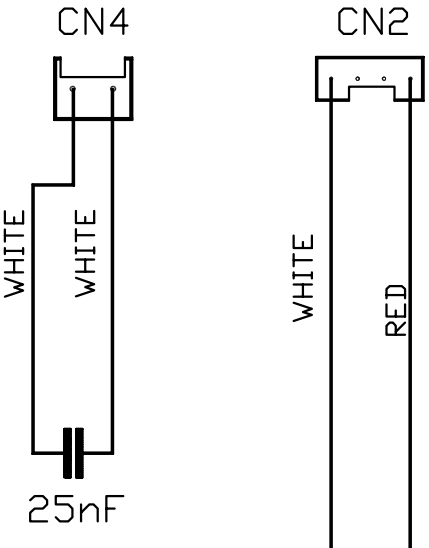
CN4
WHITE
WHITE
25nF

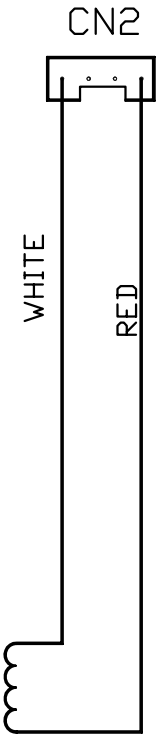
CN2
WHITE
RED

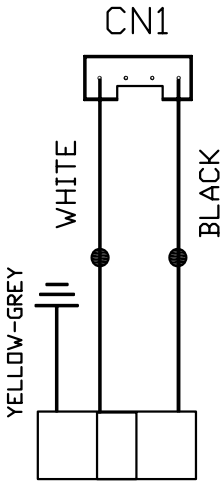
CN1
WHITE
BLACK
YELLOW-GREY

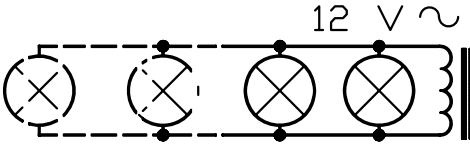
12 V ~

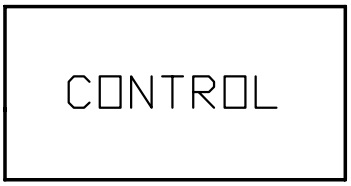
CONTROL

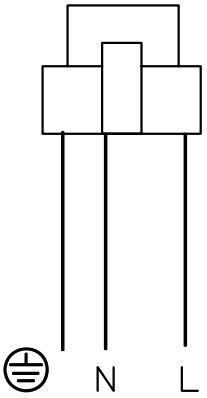
N
L