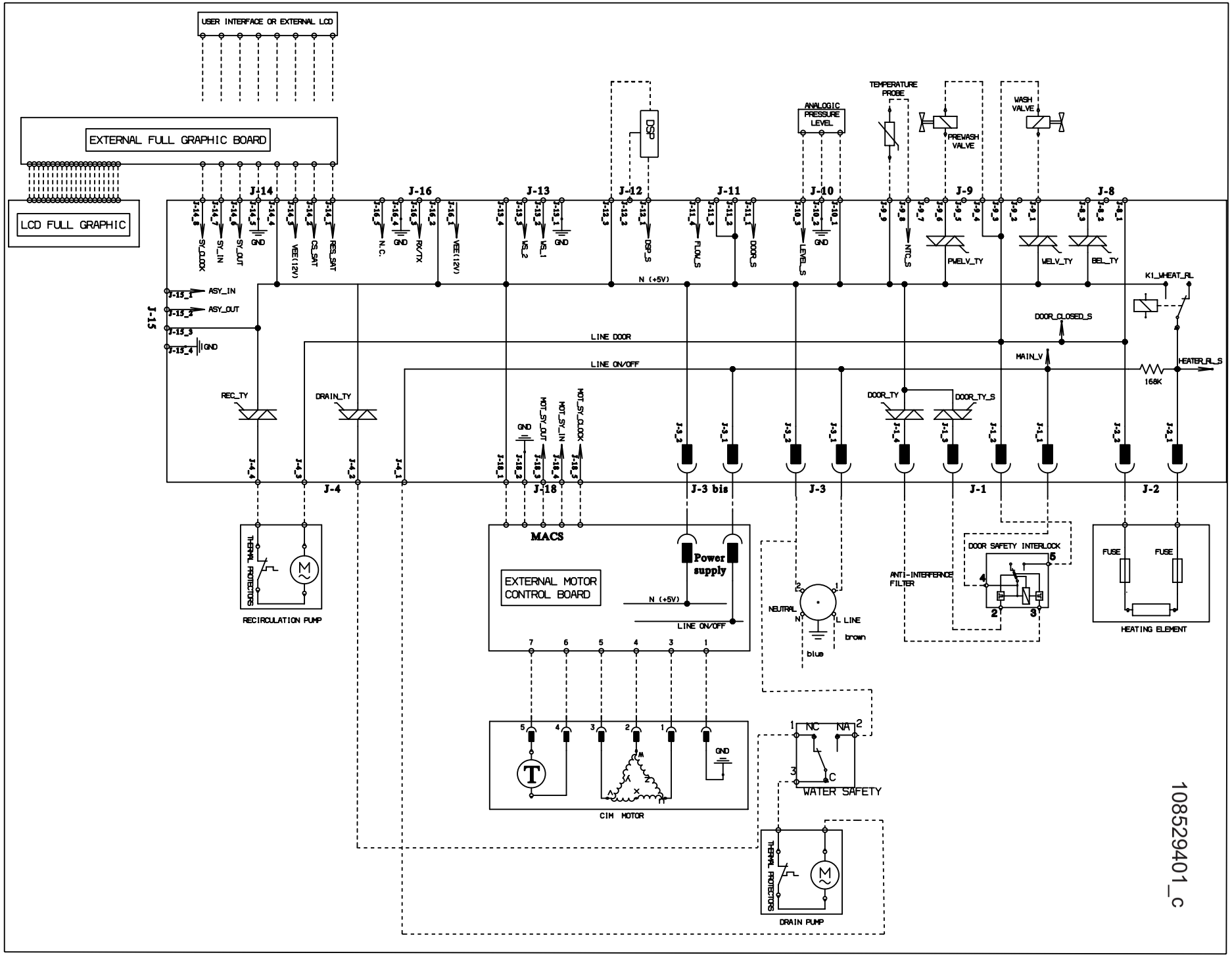
USER INTERFACE OR EXTERNAL LCD
EXTERNAL FULL GRAPHIC BOARD
LCD FULL GRAPHIC
J-14
J-16
J-13
J-12
J-11
J-10
J-9
J-8
J-15
J-4
J-18
J-3 bis
J-3
J-1
J-2
DSP
ANALOGIC PRESSURE LEVEL
TEMPERATURE PROBE
PREWASH VALVE
WASH VALVE
SY_CLOCK
SY_IN
SY_OUT
GND
VEE(12V)
CS_SAT
RES_SAT
N.C.
RX/TX
WS_2
WS_1
DSP_S
FLOW_S
DOOR_S
LEVEL_S
NTC_S
PWELV_TY
WELV_TY
BEL_TY
N (+5V)
ASY_IN
ASY_OUT
K1_WHEAT_RL
DOOR_CLOSED_S
LINE DOOR
MAIN_V
LINE ON/OFF
HEATER_RL_S
168K
REC_TY
DRAIN_TY
MOT_SY_OUT
MOT_SY_IN
MOT_SY_CLOCK
DOOR_TY
DOOR_TY_S
THERMAL PROTECTORS
RECIRCULATION PUMP
MACS
EXTERNAL MOTOR CONTROL BOARD
Power supply
NEUTRAL
L LINE
brown
blue
ANTI-INTERFERNCE FILTER
DOOR SAFETY INTERLOCK
FUSE
HEATING ELEMENT
CIM MOTOR
NC
NA
C
WATER SAFETY
DRAIN PUMP

108529401_c