126 612131c

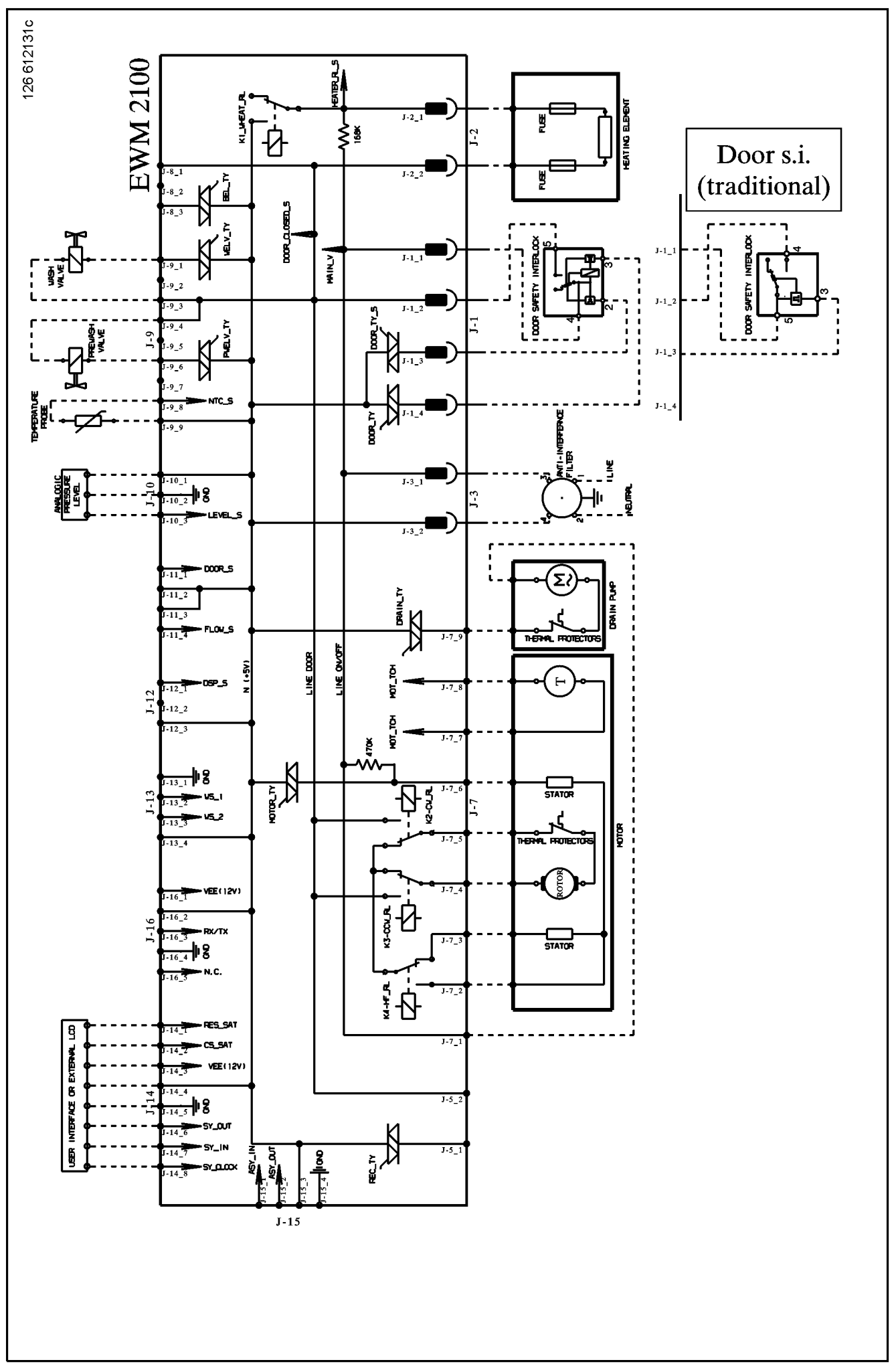
EWM 2100
Door s.i.
(traditional)
HEATING ELEMENT
FUSE
FUSE
DOOR SAFETY INTERLOCK
DOOR SAFETY INTERLOCK
ANTI-INTERFERENCE FILTER
LINE
NEUTRAL
DRAIN PUMP
THERMAL PROTECTORS
MOTOR
STATOR
ROTOR
STATOR
THERMAL PROTECTORS
WASH VALVE
PREWASH VALVE
TEMPERATURE PROBE
ANALOGIC PRESSURE LEVEL
USER INTERFACE OR EXTERNAL LCD
K1_HEAT_RL
HEATER_RL_S
168K
BEL_TY
WELV_TY
DOOR_CLOSED_S
MAIN_V
PUELV_TY
NTC_S
DOOR_TY_S
DOOR_TY
LEVEL_S
DOOR_S
FLOW_S
DRAIN_TY
DSP_S
N (+5V)
LINE DOOR
LINE ON/OFF
MOT_TCH
MOT_TCH
470K
MOTOR_TY
K2-CW_RL
VS_1
VS_2
VEE(12V)
RX/TX
N.C.
K3-CCW_RL
K4-HF_RL
RES_SAT
CS_SAT
VEE(12V)
SY_OUT
SY_IN
SY_CLOCK
ASY_IN
ASY_OUT
GND
REC_TY
J-1
J-2
J-3
J-7
J-9
J-10
J-11
J-12
J-13
J-14
J-15
J-16