126 612131c

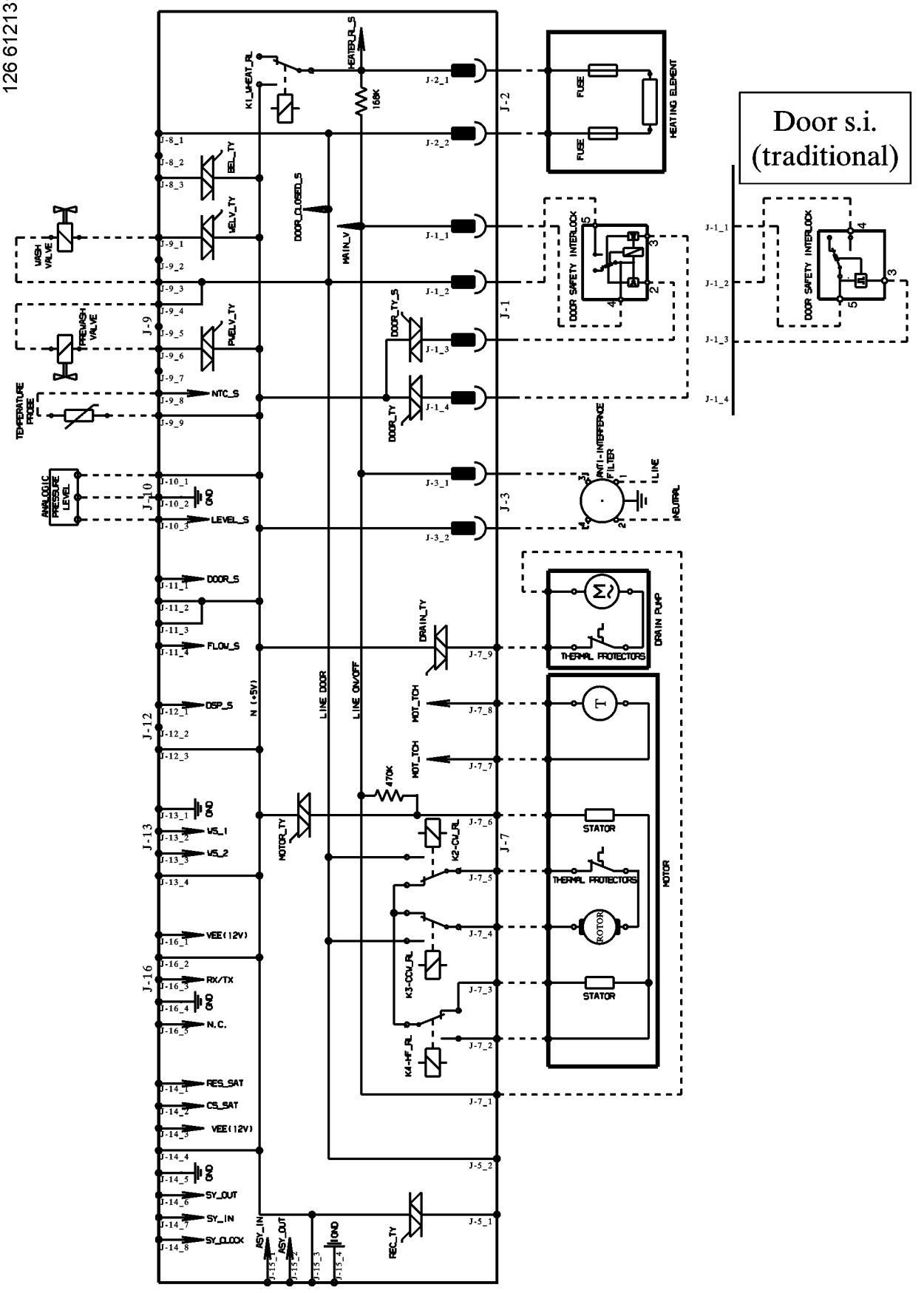
Door s.i.
(traditional)
HEATING ELEMENT
FUSE
FUSE
HEATER_R_S
K1_HEAT_RL
168K
J-2
J-2_1
J-2_2
J-1
J-1_1
J-1_2
J-1_3
J-1_4
J-3
J-3_1
J-3_2
J-7
J-7_1
J-7_2
J-7_3
J-7_4
J-7_5
J-7_6
J-7_7
J-7_8
J-7_9
J-5_1
J-5_2
J-8
J-8_1
J-8_2
J-8_3
J-9
J-9_1
J-9_2
J-9_3
J-9_4
J-9_5
J-9_6
J-9_7
J-9_8
J-9_9
J-10
J-10_1
J-10_2
J-10_3
J-11
J-11_1
J-11_2
J-11_3
J-11_4
J-12
J-12_1
J-12_2
J-12_3
J-13
J-13_1
J-13_2
J-13_3
J-13_4
J-16
J-16_1
J-16_2
J-16_3
J-16_4
J-16_5
J-14
J-14_1
J-14_2
J-14_3
J-14_4
J-14_5
J-14_6
J-14_7
J-14_8
J-15
J-15_1
J-15_2
J-15_3
J-15_4
BEL_TY
HELV_TY
PUELV_TY
DOOR_CLOSED_S
MAIN_LV
DOOR_TY_S
DOOR_TY
WASH VALVE
PREWASH VALVE
TEMPERATURE PROBE
NTC_S
ANALOGIC PRESSURE LEVEL
GND
LEVEL_S
DOOR_S
FLOW_S
DSP_S
N (+5V)
LINE DOOR
LINE ON/OFF
DRAIN_TY
MOT_TCH
MOT_TCH
470K
MOTOR_TY
K2-CVL_RL
K3-CCW_RL
K4-HF_RL
VS_1
VS_2
VEE(12V)
RX/TX
N.C.
RES_SAT
CS_SAT
VEE(12V)
SY_OUT
SY_IN
SY_CLOCK
ASY_IN
ASY_OUT
GND
REC_TY
DOOR SAFETY INTERLOCK
DOOR SAFETY INTERLOCK
ANTI-INTERFERENCE FILTER
LINE
NEUTRAL
THERMAL PROTECTORS
DRAIN PUMP
STATOR
THERMAL PROTECTORS
ROTOR
STATOR
MOTOR