EWM 1100

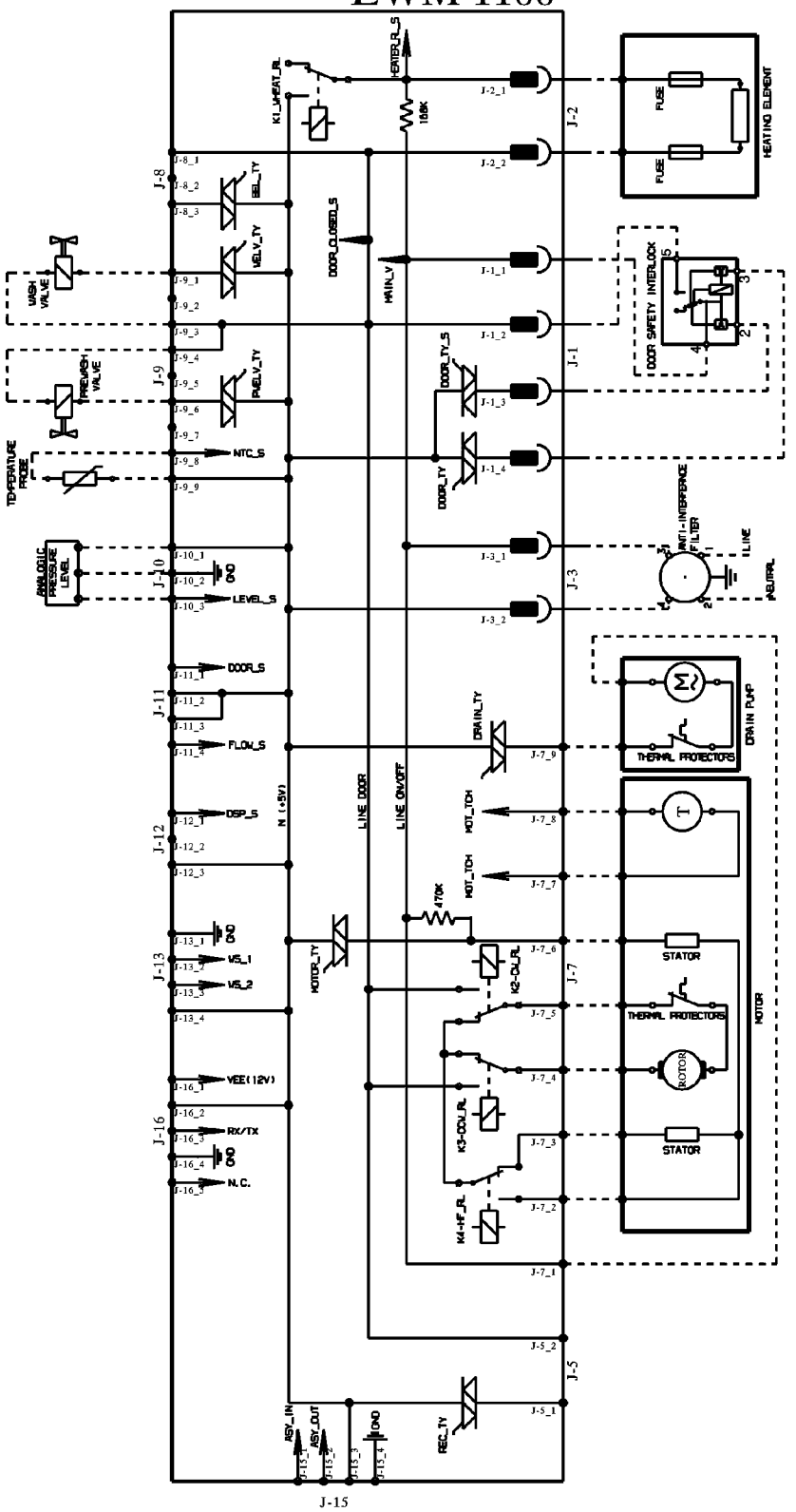
K1_HEAT_RL
HEATER_R_S
10.8K
J-2_1
J-2_2
J-2
FUSE
FUSE
HEATING ELEMENT
J-8
J-8_1
J-8_2
J-8_3
BEL_TY
WELV_TY
DOOR_CLOSED_S
MAIN_V
J-1_1
J-1_2
J-1
DOOR SAFETY INTERLOCK
WASH VALVE
J-9
J-9_1
J-9_2
J-9_3
J-9_4
J-9_5
J-9_6
J-9_7
J-9_8
J-9_9
PRESSURE VALVE
FUELV_TY
DOOR_TY_S
J-1_3
J-1_4
DOOR_TY
TEMPERATURE PROBE
NTC_S
ANALOGIC PRESSURE LEVEL
J-10
J-10_1
J-10_2
J-10_3
LEVEL_S
J-3_1
J-3_2
J-3
ANTI-INTERFERENCE FILTER
LINE
NEUTRAL
J-11
J-11_1
J-11_2
J-11_3
J-11_4
DOOR_S
FLOW_S
DRAIN_TY
J-7_9
DRAIN PUMP
THERMAL PROTECTORS
J-12
J-12_1
J-12_2
J-12_3
DSP_S
N (+5V)
LINE DOOR
LINE ON/OFF
MOT_TCH
J-7_8
J-7_7
470K
J-13
J-13_1
J-13_2
J-13_3
J-13_4
VS_1
VS_2
MOTOR_TY
J-7_6
K2-CDL_RL
J-7
J-7_5
STATOR
THERMAL PROTECTORS
ROTOR
MOTOR
J-7_4
VEE (12V)
J-16
J-16_1
J-16_2
J-16_3
J-16_4
J-16_5
RX/TX
N.C.
K3-CDL_RL
J-7_3
STATOR
K4-HF_RL
J-7_2
J-7_1
J-5_2
J-5
J-5_1
REC_TY
ASY_IN
ASY_OUT
GND
J-15_1
J-15_2
J-15_3
J-15_4
J-15