EWM 1100

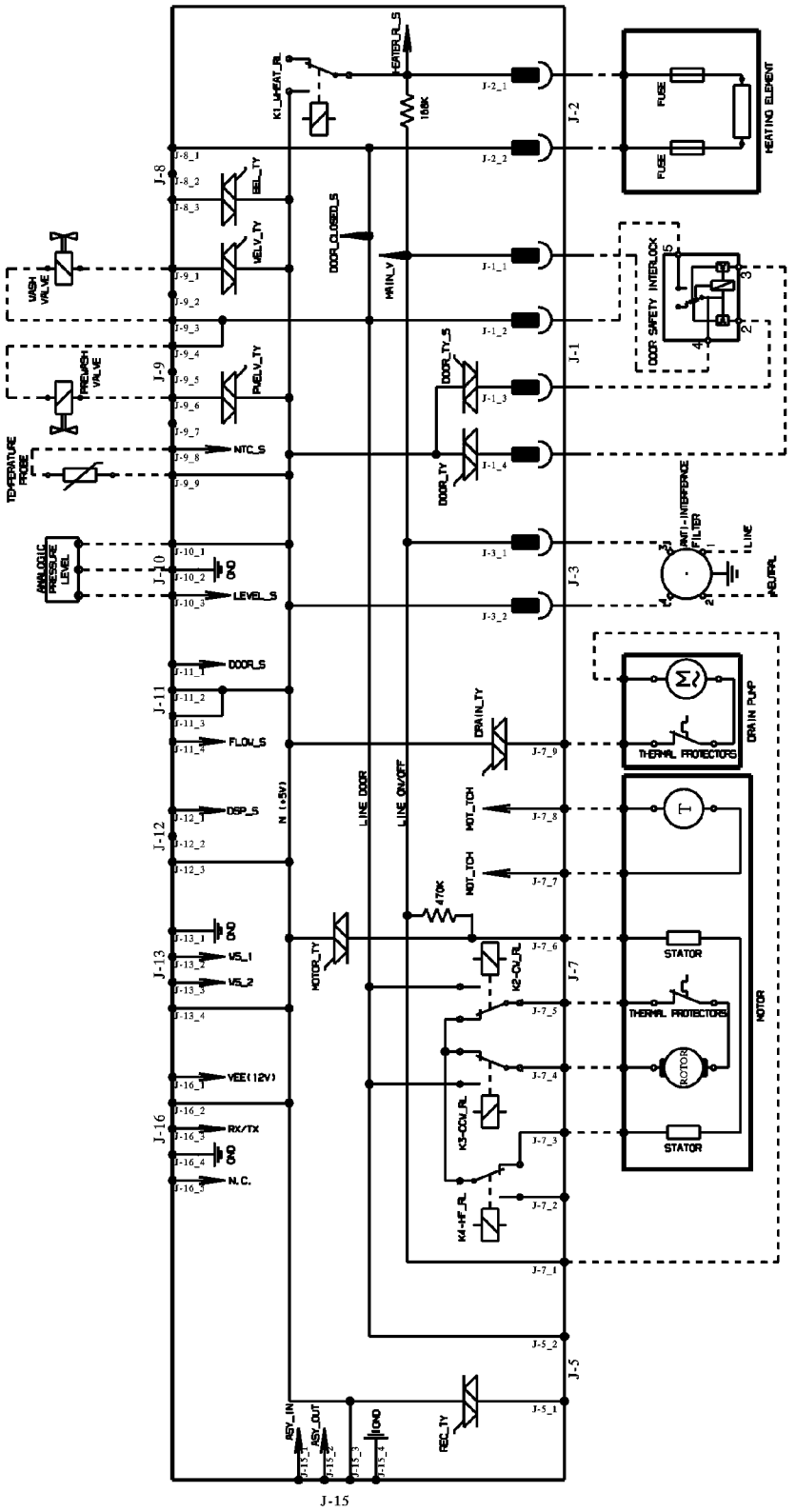
HEATING ELEMENT
FUSE
FUSE
DOOR SAFETY INTERLOCK
ANTI-INTERFERENCE FILTER
L LINE
NEUTRAL
DRAIN PUMP
THERMAL PROTECTORS
MOTOR
STATOR
ROTOR
THERMAL PROTECTORS
STATOR
WASH VALVE
PRESSURE VALVE
TEMPERATURE PROBE
ANALOGIC PRESSURE LEVEL
K1_HEAT_RL
HEATER_S
18K
BEL_TY
WELV_TY
FUELV_TY
DOOR_CLOSED_S
MAIN_V
DOOR_TY_S
DOOR_TY
NTC_S
LEVEL_S
DOOR_S
FLOW_S
DSP_S
N (+5V)
LINE DOOR
LINE ON/OFF
DRAIN_TY
MOT_TCH
MOT_TCH
470K
MOTOR_TY
K2-CW_RL
K3-CCW_RL
K4-HF_RL
VS_1
VS_2
VEE(12V)
RX/TX
N.C.
REC_TY
ASY_IN
ASY_OUT
GND
J-1
J-2
J-3
J-5
J-7
J-8
J-9
J-10
J-11
J-12
J-13
J-15
J-16