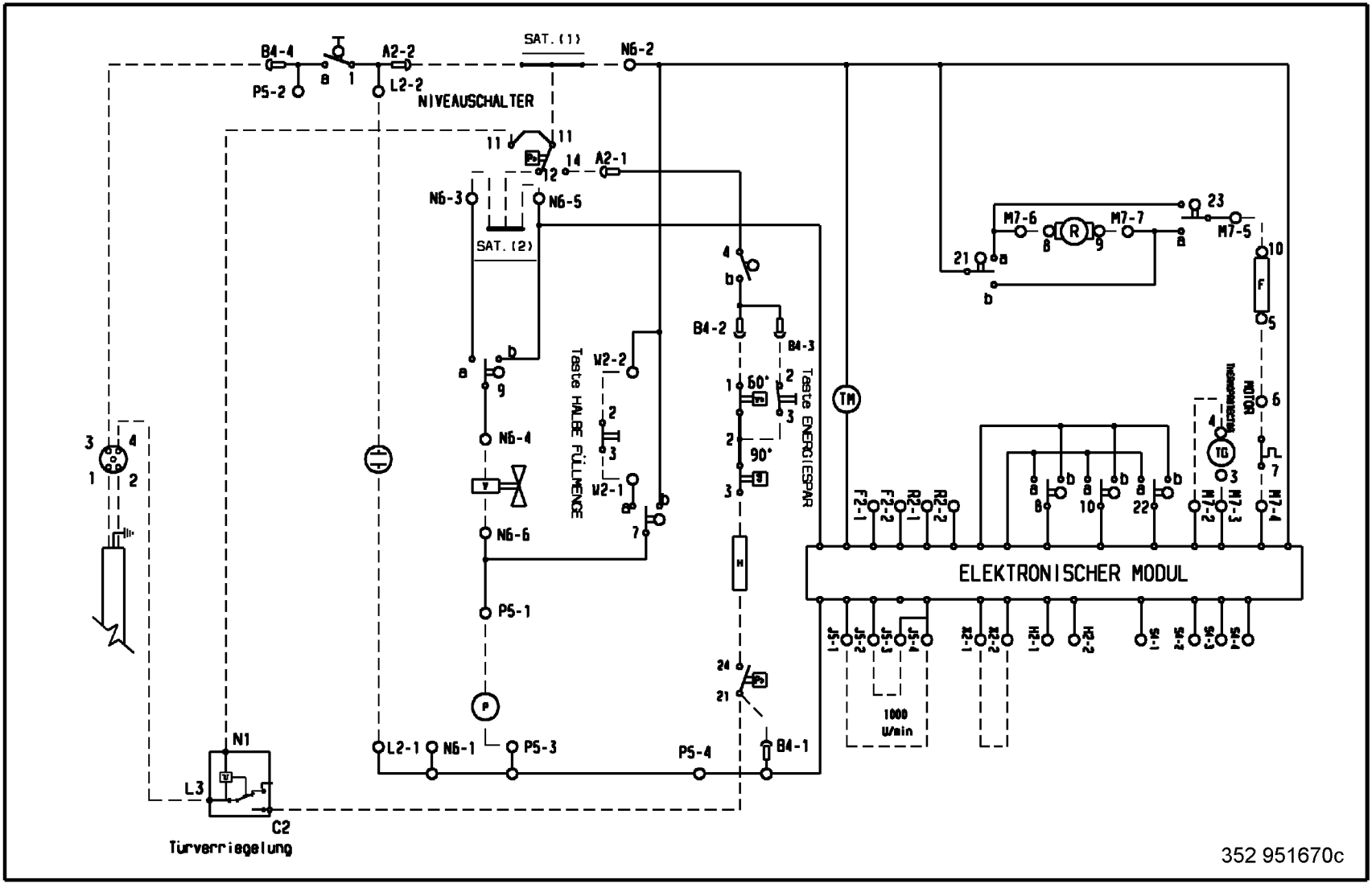
B4-4
P5-2
A2-2
L2-2
NIVEAUSCHALTER
SAT. (1)
N6-2
A2-1
N6-3
N6-5
SAT. (2)
N6-4
N6-6
P5-1
W2-2
W2-1
Taste HALBE FÜLLMENGE
B4-2
B4-3
Taste ENERGIESPAR
60°
90°
TM
M7-6
M7-7
M7-5
F
MOTOR
TG
F2-1
F2-2
R2-1
R2-2
M7-2
M7-3
M7-4
ELEKTRONISCHER MODUL
J5-1
J5-2
J5-3
J5-4
1000 U/min
P5-3
P5-4
B4-1
L2-1
N6-1
N1
L3
C2
Türverriegelung

352 951670c