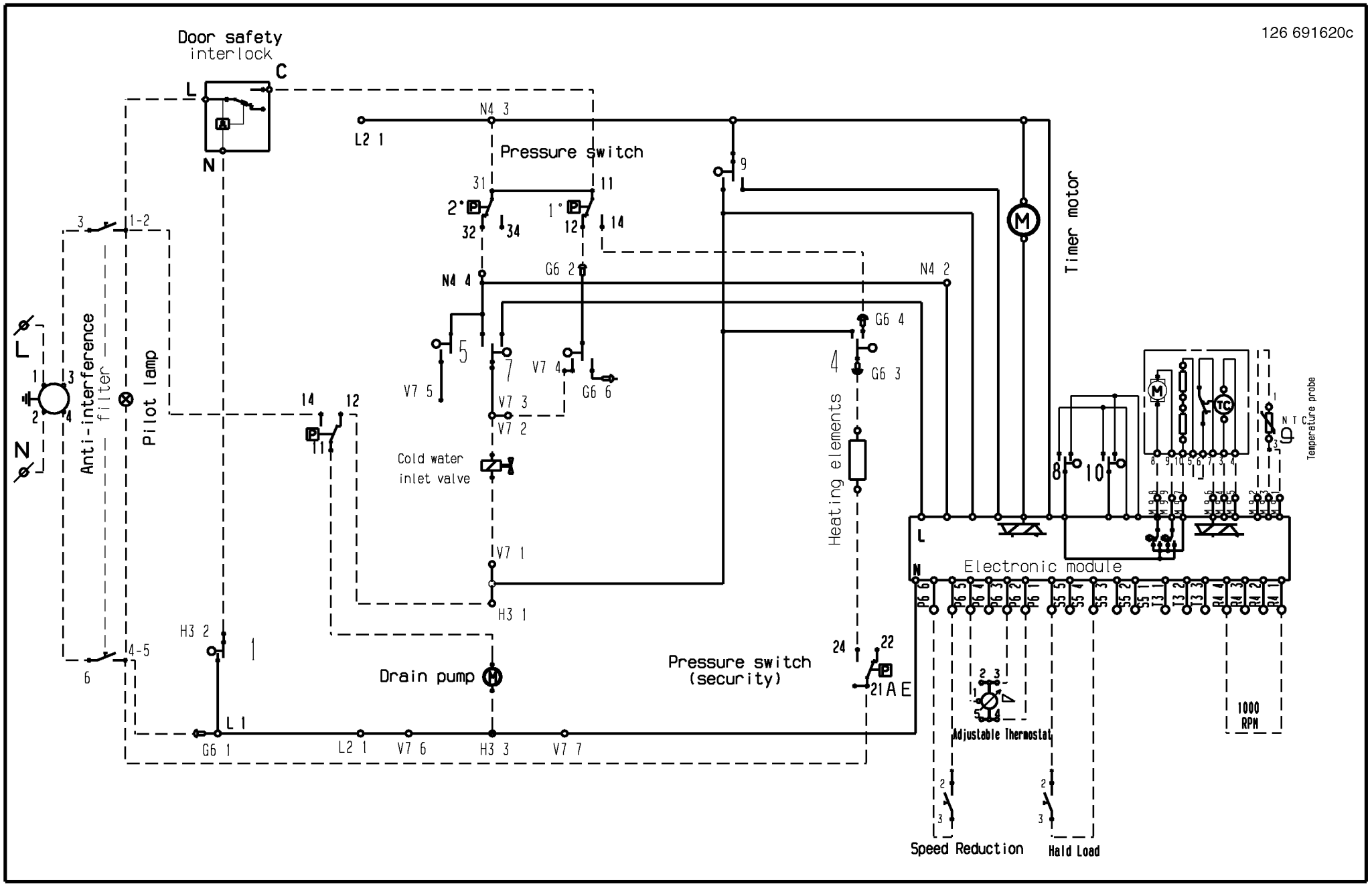
126 691620c
Door safety
interlock
C
L
N
L2 1
N4 3
Pressure switch
31
11
2°
1°
32
34
12
14
9
Timer motor
M
3
1-2
N4 4
G6 2
N4 2
G6 4
G6 3
5
7
V7 4
G6 6
V7 5
V7 3
V7 2
4
Heating elements
L
N
Anti-interference
filter
Pilot lamp
14
12
11
Cold water
inlet valve
V7 1
H3 1
8
10
TC
6
NTC
Temperature probe
Electronic module
P6 6
P6 5
P6 4
P6 3
P6 2
P6 1
S5 5
S5 4
S5 3
S5 2
S5 1
T3 1
T3 2
T3 3
R4 4
R4 3
R4 2
R4 1
H3 2
1
4-5
6
Drain pump
Pressure switch
(security)
24
22
21 A E
L 1
G6 1
L2 1
V7 6
H3 3
V7 7
Adjustable Thermostat
1000
RPM
Speed Reduction
Hald Load