126 691350c

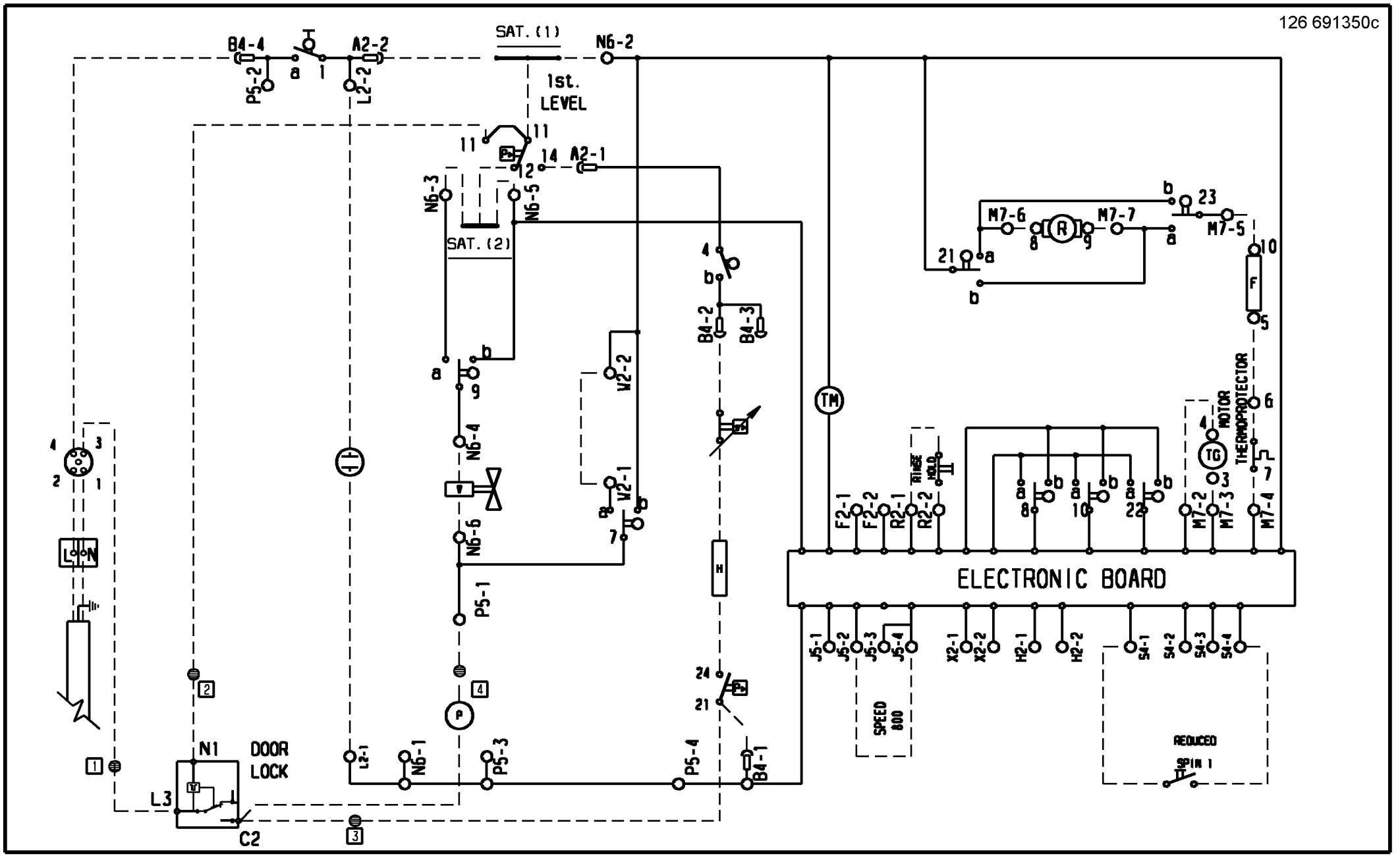
SAT. (1)
1st. LEVEL
SAT. (2)
B4-4
A2-2
P5-2
L2-2
N6-2
A2-1
N6-3
N6-5
N6-4
N6-6
P5-1
V2-2
V2-1
B4-2
B4-3
M7-6
M7-7
M7-5
F
MOTOR THERMOPROTECTOR
TM
TG
R
H
P
F2-1
F2-2
R2-1
R2-2
RINSE HOLD
M7-2
M7-3
M7-4
ELECTRONIC BOARD
J5-1
J5-2
J5-3
J5-4
X2-1
X2-2
H2-1
H2-2
S4-1
S4-2
S4-3
S4-4
SPEED 800
REDUCED SPIN 1
N1
DOOR LOCK
L3
C2
L2-1
N6-1
P5-3
P5-4
B4-1
L
N