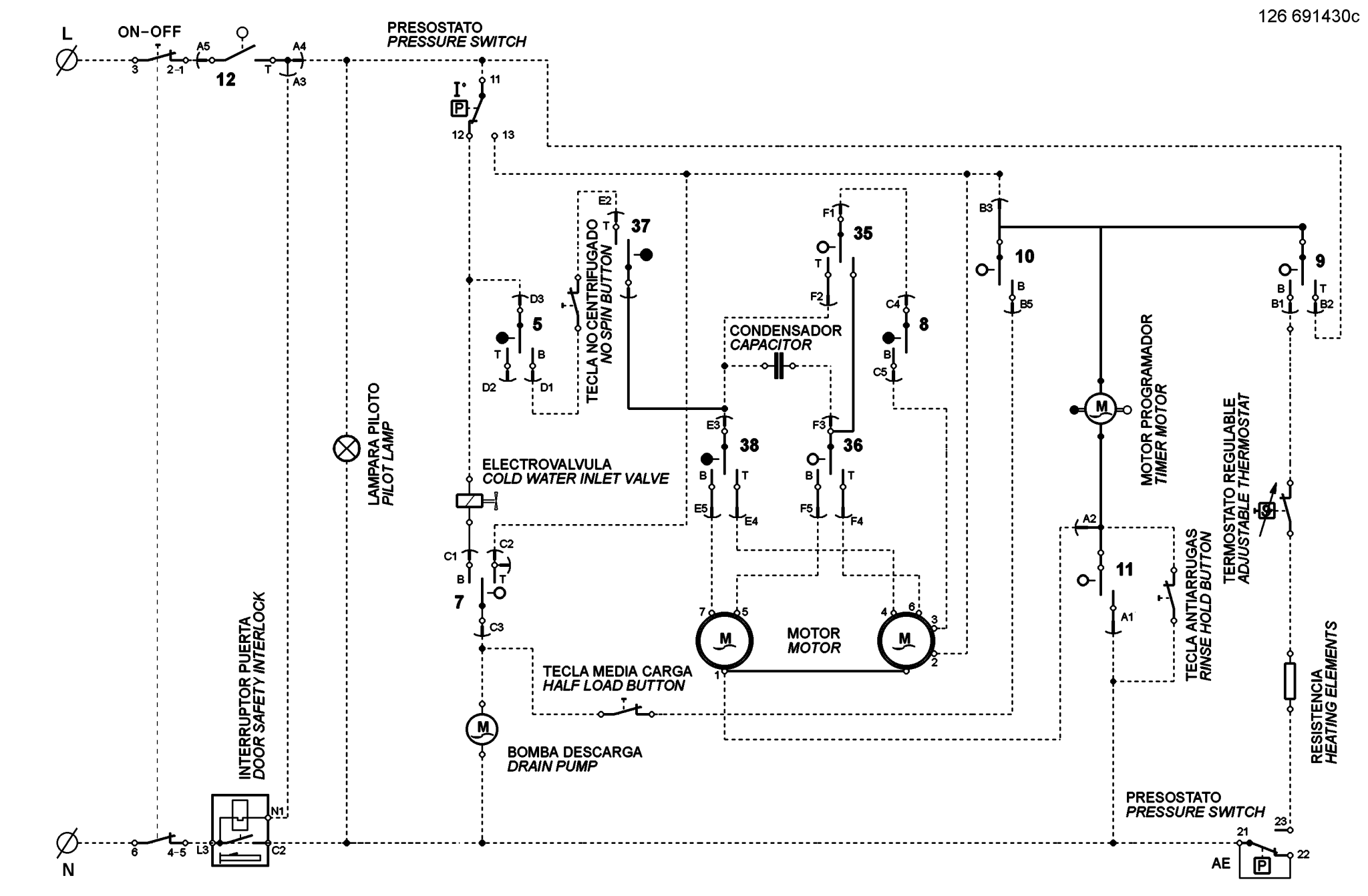
L
N
ON-OFF
12
PRESOSTATO
PRESSURE SWITCH
TECLA NO CENTRIFUGADO
NO SPIN BUTTON
CONDENSADOR
CAPACITOR
LAMPARA PILOTO
PILOT LAMP
ELECTROVALVULA
COLD WATER INLET VALVE
MOTOR PROGRAMADOR
TIMER MOTOR
TERMOSTATO REGULABLE
ADJUSTABLE THERMOSTAT
TECLA ANTIARRUGAS
RINSE HOLD BUTTON
MOTOR
MOTOR
TECLA MEDIA CARGA
HALF LOAD BUTTON
BOMBA DESCARGA
DRAIN PUMP
INTERRUPTOR PUERTA
DOOR SAFETY INTERLOCK
RESISTENCIA
HEATING ELEMENTS
PRESOSTATO
PRESSURE SWITCH
AE