126 691430b

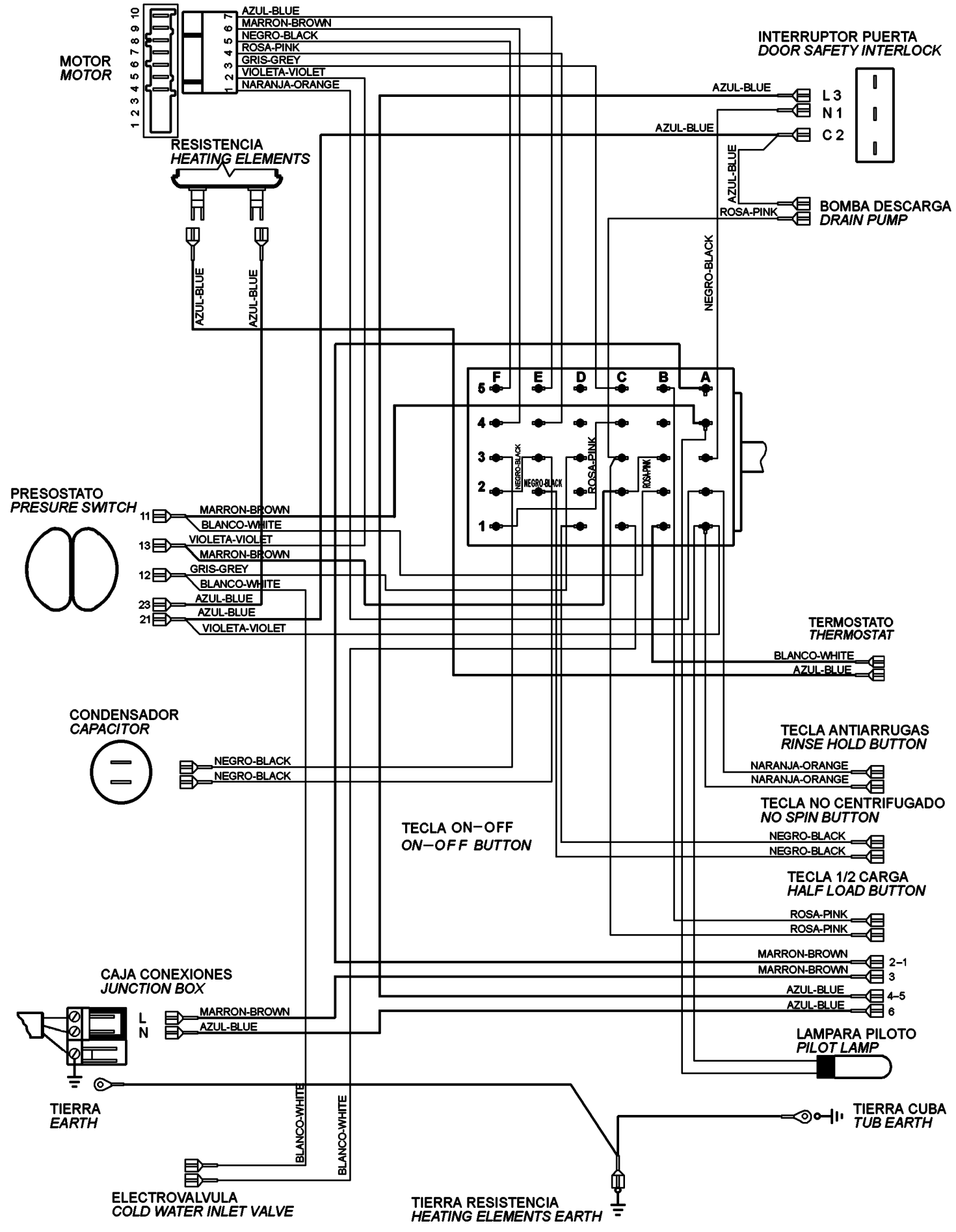
MOTOR
MOTOR
AZUL-BLUE
MARRON-BROWN
NEGRO-BLACK
ROSA-PINK
GRIS-GREY
VIOLETA-VIOLET
NARANJA-ORANGE
INTERRUPTOR PUERTA
DOOR SAFETY INTERLOCK
L 3
N 1
C 2
BOMBA DESCARGA
DRAIN PUMP
RESISTENCIA
HEATING ELEMENTS
PRESOSTATO
PRESURE SWITCH
BLANCO-WHITE
TERMOSTATO
THERMOSTAT
CONDENSADOR
CAPACITOR
TECLA ANTIARRUGAS
RINSE HOLD BUTTON
TECLA NO CENTRIFUGADO
NO SPIN BUTTON
TECLA ON–OFF
ON–OFF BUTTON
TECLA 1/2 CARGA
HALF LOAD BUTTON
CAJA CONEXIONES
JUNCTION BOX
LAMPARA PILOTO
PILOT LAMP
TIERRA
EARTH
TIERRA CUBA
TUB EARTH
ELECTROVALVULA
COLD WATER INLET VALVE
TIERRA RESISTENCIA
HEATING ELEMENTS EARTH