126 691090c

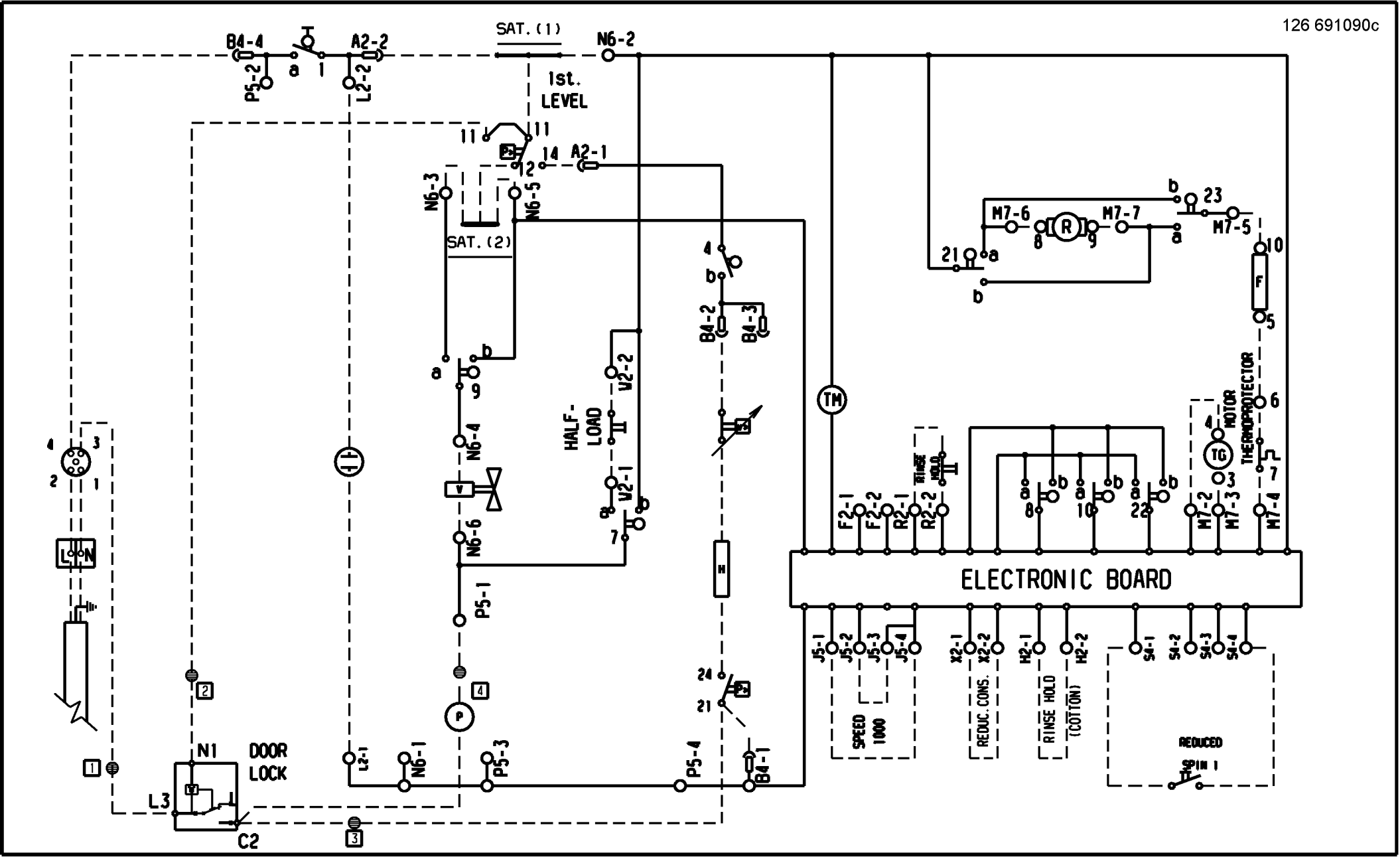
SAT. (1)
1st. LEVEL
SAT. (2)
HALF-LOAD
ELECTRONIC BOARD
DOOR LOCK
N1
C2
L3
L N
TM
R
TG
F
P
H
MOTOR THERMOPROTECTOR
RINSE HOLD
SPEED 1000
REDUC. CONS.
RINSE HOLD (COTTON)
REDUCED SPIN 1
B4-4
A2-2
P5-2
L2-2
N6-2
A2-1
N6-3
N6-5
N6-4
N6-6
P5-1
V2-2
V2-1
B4-2
B4-3
M7-6
M7-7
M7-5
M7-2
M7-3
M7-4
F2-1
F2-2
R2-1
R2-2
J5-1
J5-2
J5-3
J5-4
X2-1
X2-2
H2-1
H2-2
S4-1
S4-2
S4-3
S4-4
L2-1
N6-1
P5-3
P5-4
B4-1