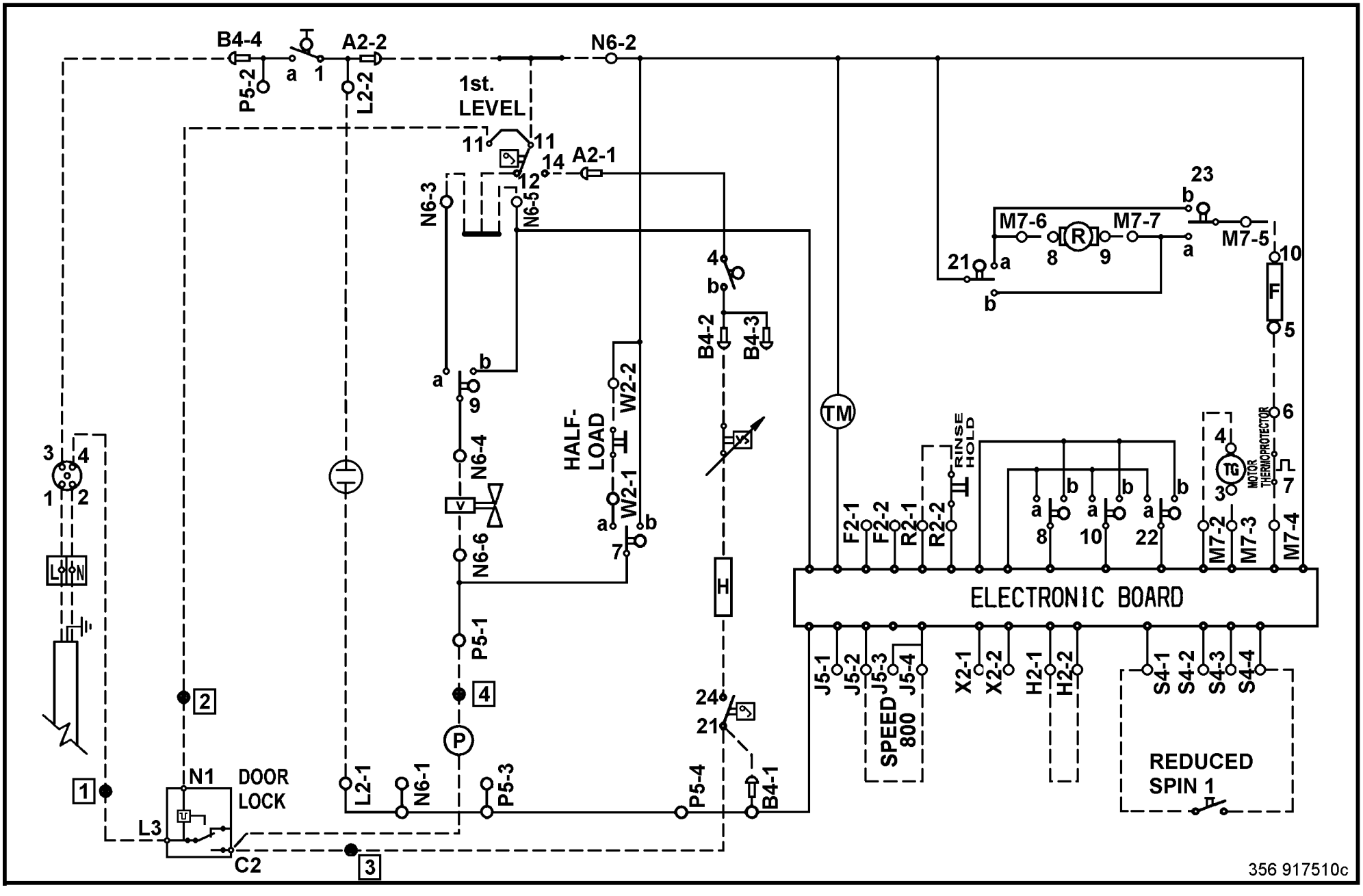
B4-4
A2-2
N6-2
P5-2
L2-2
1st.
LEVEL
A2-1
N6-3
N6-5
23
M7-6
M7-7
M7-5
21
F
HALF-
LOAD
W2-2
W2-1
B4-2
B4-3
TM
RINSE
HOLD
MOTOR
THERMOPROTECTOR
N6-4
N6-6
P5-1
H
F2-1
F2-2
R2-1
R2-2
M7-2
M7-3
M7-4
ELECTRONIC BOARD
J5-1
J5-2
J5-3
J5-4
X2-1
X2-2
H2-1
H2-2
S4-1
S4-2
S4-3
S4-4
SPEED
800
REDUCED
SPIN 1
N1
DOOR
LOCK
L3
C2
L2-1
N6-1
P5-3
P5-4
B4-1
356 917510c