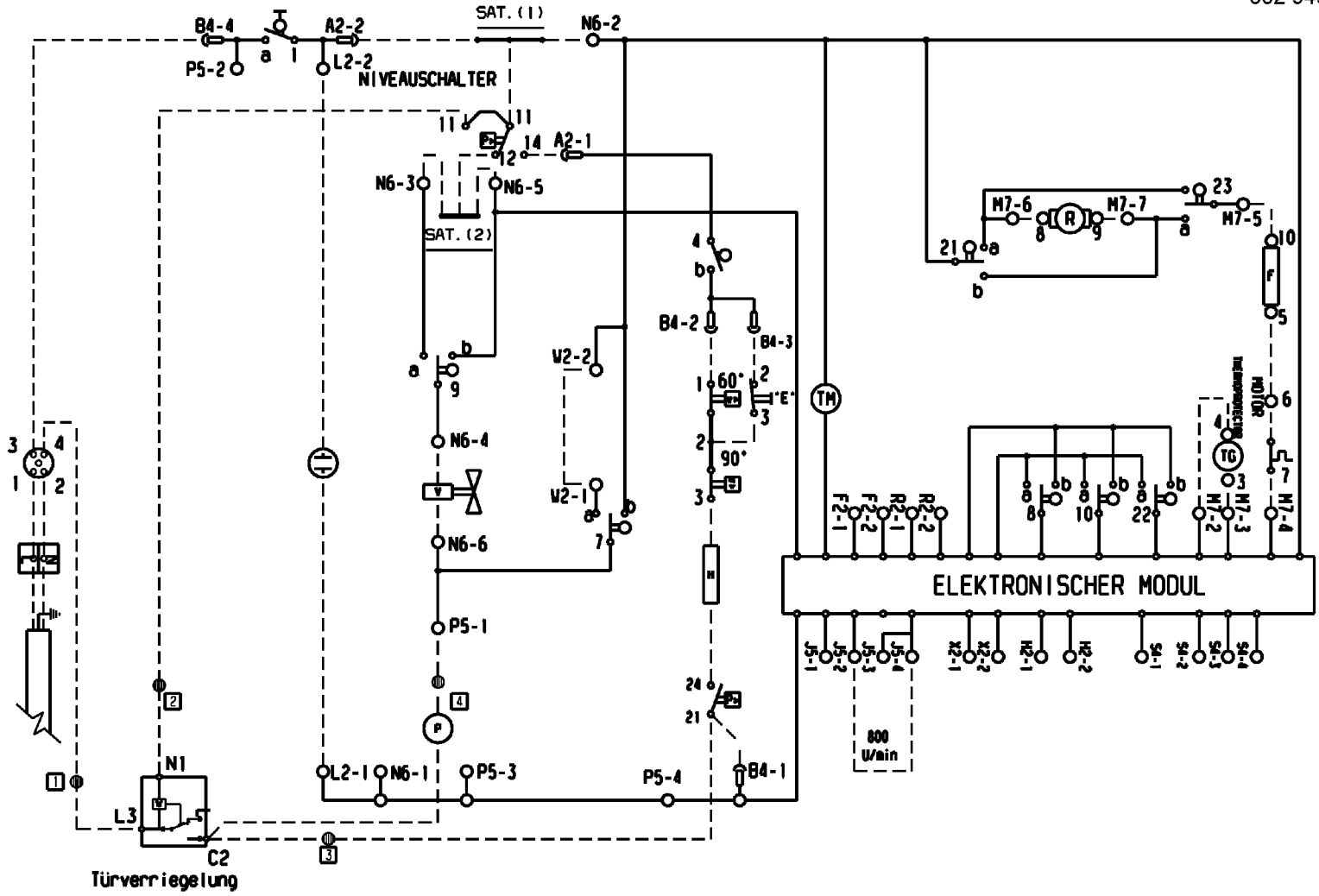
B4-4
P5-2
A2-2
L2-2
SAT. (1)
N6-2
NIVEAUSCHALTER
A2-1
N6-3
N6-5
SAT. (2)
N6-4
N6-6
P5-1
W2-2
W2-1
B4-2
B4-3
60°
90°
"E"
TM
M7-6
M7-7
M7-5
M7-2
M7-3
M7-4
F2-1
F2-2
R2-1
R2-2
ELEKTRONISCHER MODUL
800 U/min
N1
L3
C2
Türverriegelung
L2-1
N6-1
P5-3
P5-4
B4-1