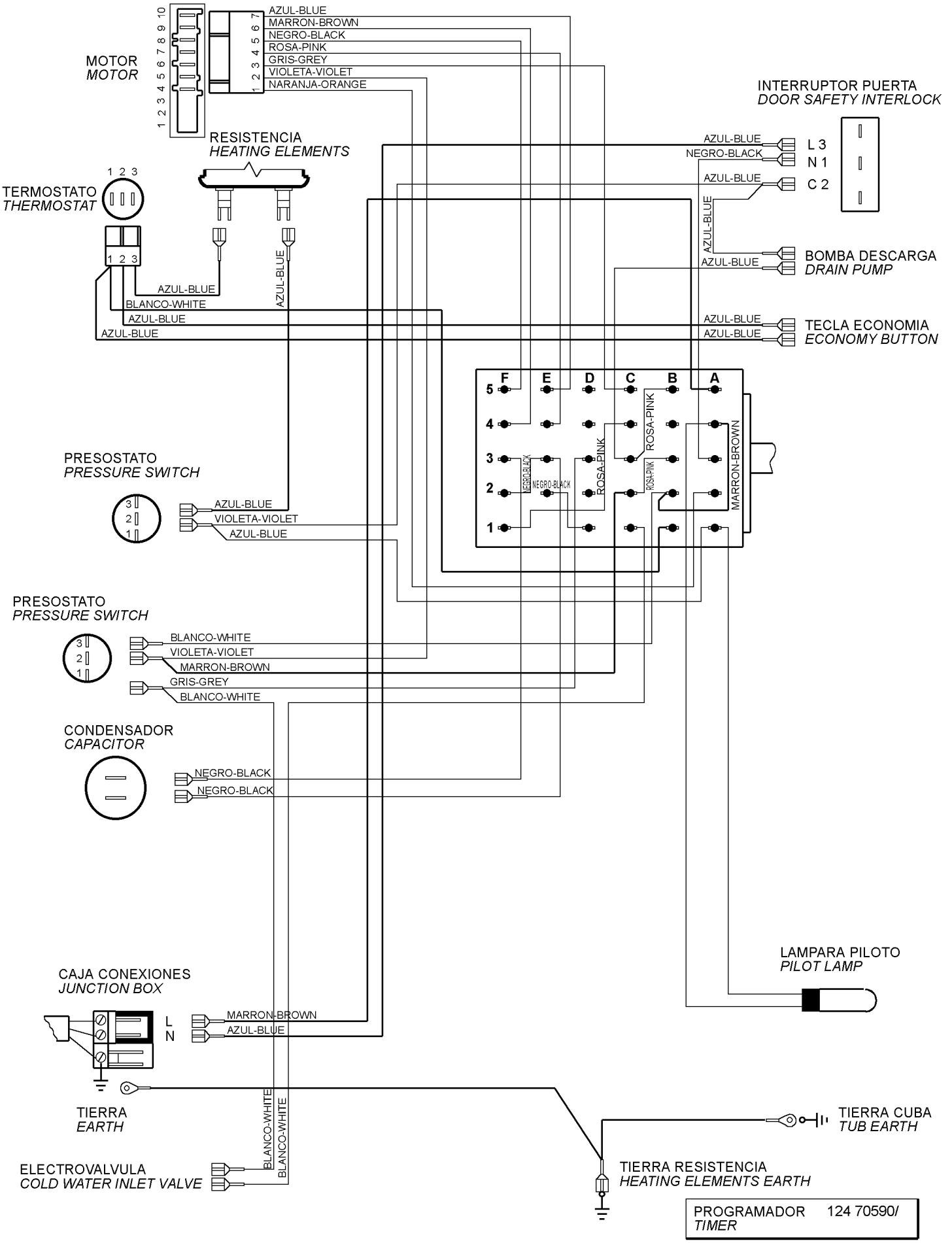
MOTOR
MOTOR
AZUL-BLUE
MARRON-BROWN
NEGRO-BLACK
ROSA-PINK
GRIS-GREY
VIOLETA-VIOLET
NARANJA-ORANGE
INTERRUPTOR PUERTA
DOOR SAFETY INTERLOCK
L 3
N 1
C 2
RESISTENCIA
HEATING ELEMENTS
TERMOSTATO
THERMOSTAT
BOMBA DESCARGA
DRAIN PUMP
BLANCO-WHITE
TECLA ECONOMIA
ECONOMY BUTTON
PRESOSTATO
PRESSURE SWITCH
PRESOSTATO
PRESSURE SWITCH
CONDENSADOR
CAPACITOR
LAMPARA PILOTO
PILOT LAMP
CAJA CONEXIONES
JUNCTION BOX
L
N
TIERRA
EARTH
TIERRA CUBA
TUB EARTH
ELECTROVALVULA
COLD WATER INLET VALVE
TIERRA RESISTENCIA
HEATING ELEMENTS EARTH
PROGRAMADOR 124 70590/
TIMER
356 919030