APOLLO UPDATE

TIER 3 HOT AIR 1.13

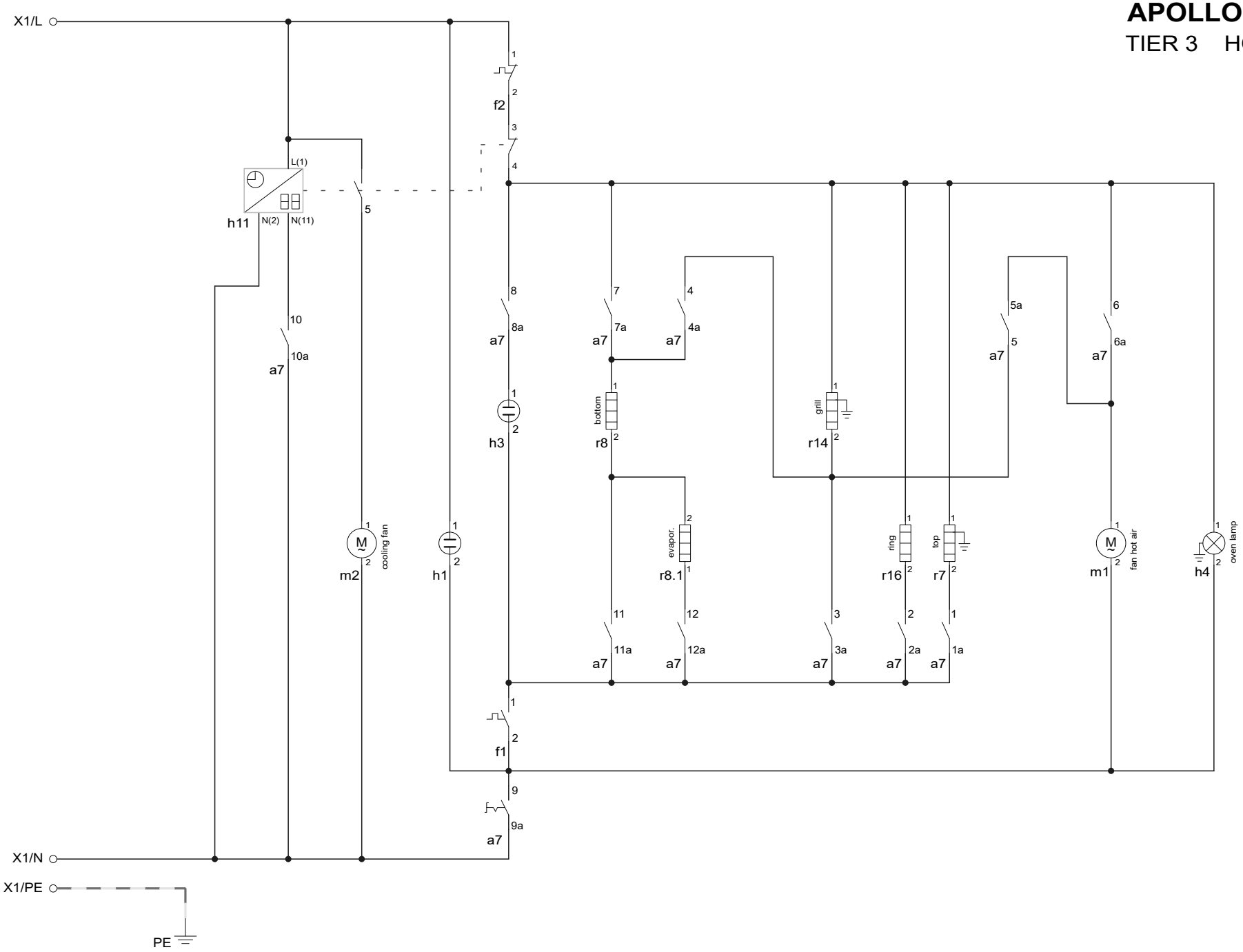

A13208902