APOLLO UPDATE 400V

TIER 3 HOT AIR 1.12

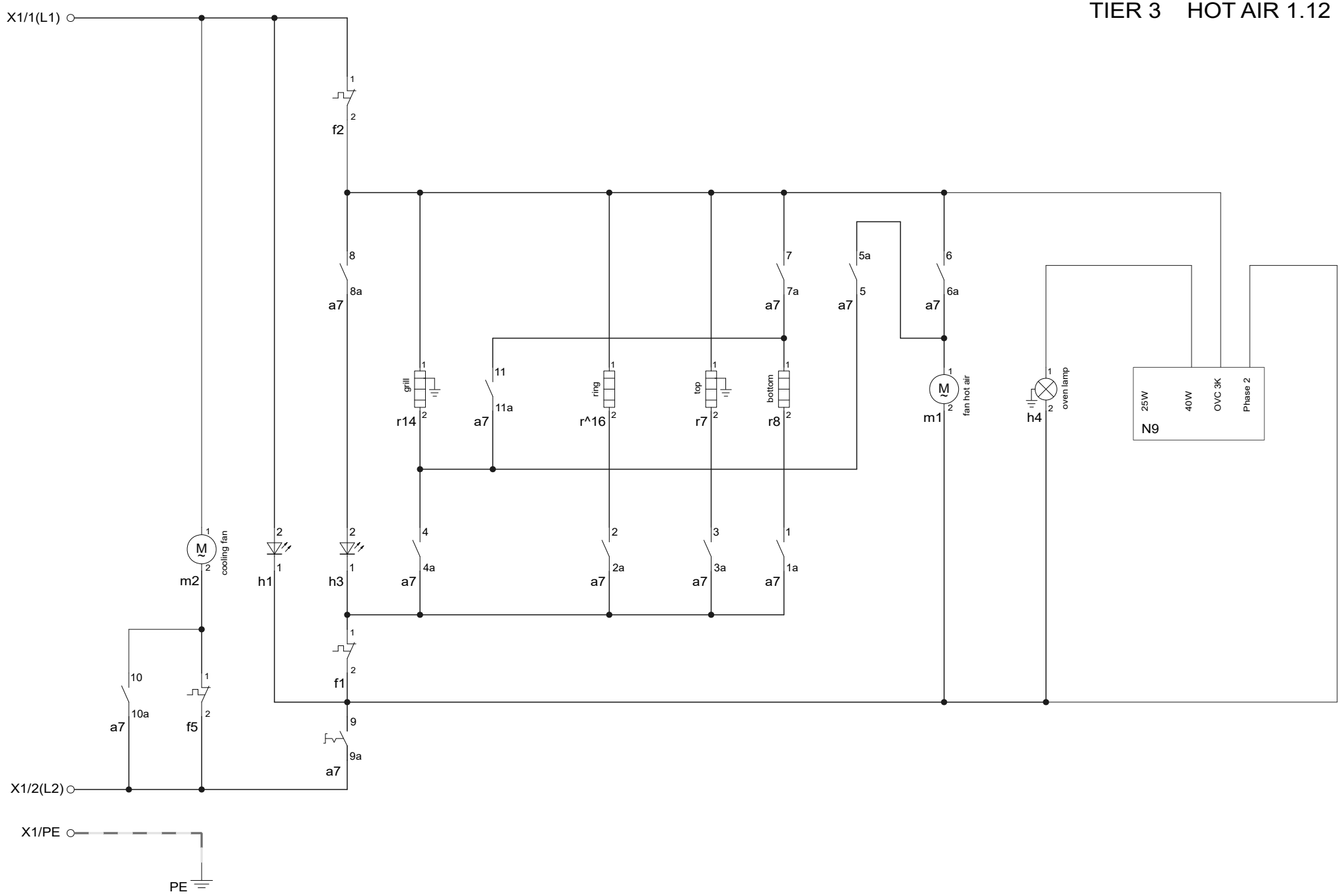

A13208002